BUREAU OF ENGINEERING

MASTER GENERAL REQUIREMENTS

November 2025
AVON STREET (1923) BULKHEAD
W.O. E1909302

City of Los Angeles
California

Department of Public Works
Bureau of Engineering

TABLE OF CONTENTS
DIVISION 01 – GENERAL REQUIREMENTS

01100 SUMMARY

01111 ABBREVIATIONS AND REFERENCE STANDARDS
01112 DESCRIPTION OF WORK
01113 DIVISIONS OF TECHNICAL SECTIONS OF PROJECT MANUAL
01114 ISSUANCE OF DRAWINGS AND THE PROJECT MANUAL
01115 MANDATORY PROVISIONS
01116 ELECTRONIC DOCUMENT CONTROL
01120 INTERFACE / COORDINATION REQUIREMENTS
01140 CONTRACTOR'S USE OF THE PREMISES
01150 STORAGE OF MATERIALS AND EQUIPMENT

01200 PRICE AND PAYMENT PROCEDURES

01211 ALLOWANCE FOR EQUIPMENT SUBSTITUTIONS FOR COMPATIBILITY PURPOSES
01212 FIXED CASH ALLOWANCE ITEMS
01251 CHANGE ORDER REQUESTS
01253 DIFFERING SITE CONDITION
01254 CHANGE ORDERS
01255 PRICE REDUCTION FOR DEFECTIVE COST OR PRICING DATA
01270 MEASUREMENT OF QUANTITIES FOR UNIT PRICE WORK
01291 NOTICE TO WITHHOLD AND/OR STOP NOTICE
01292 PAYMENTS
01298 SCHEDULE OF VALUES / CONTRACT PRICE BREAKDOWN

01300 ADMINISTRATIVE REQUIREMENTS

01313 WORK BY CITY OR OTHERS
01321 CONTRACTOR'S CONSTRUCTION SCHEDULE AND REPORTS
01322 CONSTRUCTION PROGRESS PHOTOGRAPHY
01330 SHOP DRAWINGS / SUBMITTALS
01350 AUDIT AND ACCESS TO RECORDS

01400 QUALITY REQUIREMENTS

01411 CONFINED SPACE ENTRY
01420 UNITS OF MEASURE
01421 SYMBOLS
01452 INSPECTION OF THE WORK
01453 SAMPLING, TESTING AND FABRICATION INSPECTION
01454 WEIGHING AND METERING EQUIPMENT
01455 CALIBRATION OF TESTING EQUIPMENT

01500 TEMPORARY FACILITIES AND CONTROLS

01561 ENVIRONMENTAL CONTROL
01562 ENVIRONMENTAL MITIGATION
01563 POLLUTION CONTROL -SEWAGE SPILL PREVENTION AND RESPONSE REQUIREMENTS
01571 STORMWATER POLLUTION CONTROL MEASURES FOR CONSTRUCTION ACTIVITIES
01572 CONSTRUCTION AND DEMOLITION WASTE MANAGEMENT
01573 EXCAVATION SHORING, FORMS, AND FALSEWORK
01581 PROJECT SIGNS

01600 PRODUCT REQUIREMENTS

01601 BUY CLEAN CALIFORNIA ACT
01611 GUARANTY / WARRANTY
01630 SUBSTITUTIONS AND "OR EQUAL" SUBMITTAL

01700 EXECUTION REQUIREMENTS

01711 SITE INVESTIGATION
01712 SUBSURFACE DATA
01721 MOBILIZATION
01722 SURVEYING
01723 RIGHT OF WAY
01732 ADDITIONAL POTHOLING
01740 REMOVAL, CLEANUP, AND DEMOBILIZATION
01770 PROJECT CLOSEOUT
01783 RECORD DRAWINGS AND RECORDS PROJECT MANUAL

SECTION 01111
ABBREVIATIONS AND REFERENCE STANDARDS

1.1 ABBREVIATIONS

A. The abbreviations herein, together with others in general use, are applicable to this Project Manual, Contract Drawings, and other Contract Documents.

All abbreviations and symbols used on Contract Drawings for structural steel construction shall conform to those given by the "Manual of Steel Construction" published by the American Institute of Steel Construction, Inc.

B. Common Usage: Whenever the following abbreviations are used, they shall have the meanings indicated:

ABAN	Abandon
ABAND	Abandoned
ABUT	Abutment
ABS	Acrylonitrile – butadiene – styrene
AC	Asphalt concrete
ACP	Asbestos cement pipe
ACWS	Asphalt concrete wearing surface
ADA	Americans with Disabilities Act
AGB	Alley grating basin
AL	Allowance
ALT	Alternate
AMER STD	American Standard
AQMD	Air Quality Management District
ARHM	Asphalt-rubber hot-mix
ATSAC	Automated Traffic Surveillance and Control System
AT&T	Local and long distance telephone company (formerly SBC and Pacific Bell)
AWG	American Wire Gage (nonferrous wire)
BAGR	Bridge approach guard railing
BB	Beginning of Bridge
BC	Beginning of curve
BCR	Beginning of curb return
BDRY	Boundary
BF	Bottom of footing
BM	Bench mark
BMP	Best Management Practice
BPW	Board of Public Works
BSJ	Bell and spigot joint
BSL	Bureau of Street Lighting
BVC	Beginning of vertical curve
B/W	Back of wall
C/C	Center to center
CAB	Crushed aggregate base
CAC	California Administrative Code
CAP	Corrugated aluminum pipe
CASQA	California Storm Water Quality Association
CB	Catch Basin
Cb	Curb
CBP	Catch Basin Connection Pipe
CBR	California Bearing Ratio

CCR	California Code of Regulations
CCTV	Closed Circuit TV
CF	Curb face or Cubic foot
C&G	Curb and gutter
CGB	Curbside grating basin
CFR	Code of Federal Regulations
CIDH	Cast-in-drilled-hole
CIP	Cast iron pipe or Cast-in-place
CIPP	Cast-in place pipe
CL	Clearance, center line
CLF	Chain link fence
CLSM	Controlled Low Strength Material
CMB	Crushed miscellaneous base
CMC	Cement mortar-coated
CML	Cement mortar-lined
CMP	Corrugated Metal Pipe
CO	Cleanout (sewer)
COL	Column
CONC	Concrete
CONN	Connection
CONST	Construct, Construction
COORD	Coordinate
CQC	Contractor Quality Control
CSP	Corrugated steel pipe
CTB	Cement treated base
CV	Check valve
CY	Cubic yard
D	Load of pipe
dB	Decibels
DBE	Disadvantaged Business Enterprise
DBL	Double
DF	Douglas fir
DFT	Dry Film Thickness
DIA	Diameter
DIP	Ductile iron pipe
DL	Dead load
DMBB	Double metal beam barrier
DT	Drain Tile
DWG	Drawing
DWPPS	Los Angeles Department of Water & Power, Power System
DWPWS	Los Angeles Department of Water & Power, Water System
DWY	Driveway
DWY APR	Driveway approach
EA	Each
EB	End of bridge
EC	End of curve
ECR	End of curb return
EF	Each face
EG	Edge of gutter
EGL	Energy grade line
El	Elevation
ELC	Electrolier lighting conduit
ELT	Extra long ton
ENGR	Engineer, Engineering
EP	Edge of pavement

EPA	Environmental Protection Agency
ESA	Environmentally Sensitive Area
ESAL	Equivalent Single Axle Load
ESRP	Emergency Spill Response Plan
ESMT	Easement
ETB	Emulsion-treated base
EVC	End of vertical curb
EXC	Excavation
EXP JT	Expansion joint
EXST	Existing
F	Fahrenheit
F&C	Frame and cover
F&I	Furnish and install
FAB	Fabricate
FAS	Flashing arrow sign
FD	Floor drain
FDN	Foundation
FED SPEC	Federal Specification
FG	Finished grade
FH	Fire hydrant
FL	Flow line
FRP	Fiberglass reinforced plastic
FRPM	Fiberglass reinforced plastic mortar
FS	Finished surface
FTA	Fully traffic actuated
FT-LB	Foot-pound
FTG	Footing
FW	Face of wall
GA	Gauge
GALV	Galvanized
GC	Grade change
GCASP	State General Construction Activity Stormwater Permit
GIP	Galvanized iron pipe
GL	Ground line or grade line
GM	Gas meter
GP	Guy pole
GR	Grade
GRTG	Grating
GSP	Galvanized steel pipe
GTE	General Telephone Company
H	High or height
HB	Hose bib
HC	House connection
HDPE	High density polyethylene
HDWL	Headwall
HGL	Hydraulic grade line
HORIZ	Horizontal
HP	Horsepower
HPG	High pressure gas
HPS	High pressure sodium (Light)
HS	High strength
HYDR	Hydraulic
ID	Inside diameter
INCL	Including
INSP	Inspection

INV	Invert
IP	Iron pipe
IPW	Inspector of Public Works
JC	Junction chamber
JCT	Junction
JS	Junction structure
JT	Joint
L	Length
LAAC	Los Angeles Administrative Code
LAB	Laboratory
LADBS	Los Angeles Department of Building and Safety
LADGS	Los Angeles Department of General Services
LADOT	Los Angeles Department of Transportation
LACDPW	Los Angeles County Department of Public Works
LAMC	Los Angeles Municipal Code
LARWQCB	Los Angeles Regional Water Quality Control Board
LAT	Lateral
LB	Pound
LD	Local depression
LF	Linear foot
LH	Lamp hole
LL	Live load
LOL	Layout line
LONG	Longitudinal
LP	Lamp post
LPS	Low pressure sodium (Light)
LS	Lump sum
LTS	Lime treated soil
MA	Mast Arm
MAINT	Maintenance
MAX	Maximum
MB	Metal beam
MBB	Metal beam barrier
MBGR	Metal beam guard railing
MBE	Minority Business Enterprise
MCR	Middle of curb return
MEAS	Measure
MED	Median
MH	Manhole, maintenance hole
MIL SPEC	Military Specification
MISC	Miscellaneous
MOD	Modified, modify
MON	Monument
MSM	Mandatory subcontracting minimum
MTA	Metropolitan Transportation Authority (of LA County)
MTH	Month
MTL	Material
MULT	Multiple
MUTCD	Manual on Uniform Traffic Control Devices
MVL	Mercury vapor light
MWD	Metropolitan Water district
NOI	Notice of Intent
NPDES	National Pollutant Discharge Elimination System
NRCP	Nonreinforced concrete pipe
OBE	Other Business Enterprise

OBS	Obsolete
OC	On center
OD	Outside diameter
OE	Outer edge
OH	Overhead
OPP	Opposite
ORIG	Original
OSA	Office of the State Architect
OSHA	Occupational Safety and Health Administration (Dept. Of Labor)
PACBELL	Pacific Bell (Pacific Telesis Group)
PAV	Pressure Aging Vessel
PB	Pull box
PC	Point of curvature
PCC	Portland cement concrete or Point of compound curvature
PCVC	Point of compound vertical curve
PE	Polyethylene
PG	Performance Graded
PI	Point of intersection
PL	Property line
PMB	Processed miscellaneous base
POC	Point on curve
POT	Point on tangent
PP	Power pole
PRC	Point of revere curve
PRVC	Point of reverse vertical curve
PSI	Pounds per square inch
PT	Point of tangency
PVC	Polyvinyl chloride
PVMT	Pavement
PVT R/W	Private right-of-way
Q	Rate of flow in cubic feet per second
QA	Quality Assurance
QC	Quality Control
QUAD	Quadrangle, Quadrant
R	Radius
R&O	Rock and oil
R/W	Right-of-way
RA	Recycling agent
RAC	Recycled asphalt concrete
RAP	Reclaimed asphalt pavement
RBAC	Rubberized asphalt concrete
RC	Reinforced concrete
RCB	Reinforced concrete box
RCC	Rail Construction Corporation
RCE	Registered civil engineer
RCP	Reinforced concrete pipe
RCV	Remote control valve
REAS	Rubberized Emulsion-Aggregate Slurry
REF	Reference
REINF	Reinforced or reinforcement
RES	Reservoir
RGE	Registered geotechnical engineer
RR	Railroad
RSE	Registered structural engineer
RTE	Registered traffic engineer

RTFO	Rolling Thin Film Oven
S	Slope
SCAQMD	South Coast Air Quality Management District
SCCP	Steel cylinder concrete pipe
SCG	Southern California Gas Company
SCHED	Schedule
SCRRA	Southern California Regional Rail Authority
SD	Storm drain
SDR	Standard thermoplastic pipe dimension ratio (ratio of pipe O.D. to minimum wall thickness)
SE	Sand Equivalent
SEC	Section
SF	Square foot
SI	International System of Units (Metric)
SOCB	Side opening catch basin
SPEC	Specifications
SPPWC	Standard Plans for Public Works Construction
SR	Standard ratio
SRJ	Steel ring joint (for RCP)
SS	Sanitary sewer
SSB	Select sub-base
SSPWC	Standard Specifications for Public Works Construction
ST HWY	State highway
STA	Station
STD	Standard
STR	Straight
STR GR	Straight grade
STRUC	Structural/Structure
SW	Sidewalk
SWD	Sidewalk drain
SWMP	Storm Water Management Plan
SWPPP	Storm Water Pollution Prevention Plan
SWRCB	State (of California) Water Resources Control Board
SY	Square yard
TAN	Tangent
TC	Top of curb
TCP	Traffic control plan
TEL	Telephone
TF or T/F	Top of footing
TH	Test hole
TOPO	Topography
TR	Tract
TRANS	Transition
TS	Traffic signal or transition structure
TSC	Traffic signal conduit
TSS	Traffic signal standard
TW	Top of wall
TYP	Typical
USA	Underground Service Alert
V	Volt
VAR	Varies, Variable
VB	Valve box
VC	vertical curve
VCP	Vitrified clay pipe
VECP	Value Engineering Change Proposal

VERT	Vertical
VOL	Volume
VT	Variable thickness
W	Wider or width
WATCH	Work Area Traffic Control Handbook
WBE	Women Business Enterprise
WDID	Waste Discharge Identification Number
WI	Wrought iron
WM	Water meter
WPCP	Water Pollution Control Plan
WPJ	Weakened plane joint
WUT	Western Union Telegraph
WWECP	Wet Weather Erosion Control Plan
XCONN	Cross connection
XSEC	Cross section

C. Institutions: Wherever the following abbreviations are used they shall have the meanings indicated:

AASHTO	American Association of State Highway and Transportation Officials
ACI	American Concrete Institute
ACRI	Air Conditioning and Refrigeration Institute
ADA	Americans with Disabilities Act
AGA	American Gas Association
AGMA	American Gear Manufacturers' Association
AI	Asphalt Institute
AISC	American Institute of Steel Construction
AISI	American Iron & Steel Institute
AITC	American Institute of Timber Construction
AAMA	American Architectural Manufacturer’s Association
AMCA	Air Movement and Control Association
ANSI	American National Standards Institute
APA	American Plywood Association
API	American Petroleum Institute
APWA	American Public Works Association
AQMD	Air Quality Management District
AREA	American Railway Engineering Association
ASCE	American Society of Civil Engineers
ASHRAE	American Society of Heating, Refrigerating, and Air Conditioning Engineers
ASME	American Society of Mechanical Engineers
ASQC	American Society for Quality Control
ASTM	American Society for Testing and Materials
AWPA	American Wood Preservers Association
AWPI	American Wood Preservers Institute
AWS	American Welding Society
AWWA	American Water Works Association
BHMA	Building Hardware Manufacturer’s Association
CAC	California Administrative Code
CAL/ABL	State of California/Architectural Barriers Laws
CAL/OSHA	State of California/Occupational Safety and Health Administration
CALTRANS	California Department of Transportation
CASQA	California Stormwater Quality Association

CBM	Certified Ballast Manufacturers
CITY	City of Los Angeles
CRSI	Concrete Reinforcing Steel Institute
CSI	Construction Specifications Institute
EIA/TIA	Electronic Industries Association
EPA	Environmental Protection Agency
ETL	Department of Building & Safety Electrical Test Laboratory
FCI	Fluid Control Institute, Inc.
FIA	Factory Insurance Association
FM	Factory Mutual Association
FS	Federal Specifications
GA	Gypsum Association
GRI	Geosynthetic Research Institute
ICBO	International Conference of Building Officials
ICEA	Insulated Cable Engineers Association
IEEE	Institute of Electrical and Electronics Engineers
ISA	Instrument Society of America
LA	City of Los Angeles
LABC	City of Los Angeles Building Code
LAMC	City of Los Angeles Municipal Code
NAAMM	National Architectural Association of Metal Manufacturers
NEC	National Electrical Code
NECA	National Electrical Contractors Association
NEMA	National Electrical Manufacturers Association
NFC	National Fire Code
NFPA	National Fire Protection Association
NWMA	National Wood Manufacturer’s Association
NWWDA	National Wood Window and Door Association
NOAA	National Oceanic and Atmospheric Administration (Dept. of Commerce)
OSA	Office of the State Architect
OSHA	Occupational Safety and Health Administration (Dept. of Labor)
PCA	Portland Cement Association
RA	Rule of General Application – Department & Safety
RCSC	Research Council on Structural Connections of the Engineering Foundation
SAMA	Scientific Apparatus Manufacturer's Association
SDI	Steel Deck Institute
SMACNA	Sheet Metal and Air Conditioning Contractor’s National Association
SSPC	Steel Structures Painting Council
SSPWC	Standard Specifications for Public Works Construction
SWRCB	State Water Resources Control Board
UBC	Uniform Building Code, International Conference of Building Officials
UL	Underwriters Laboratories, Inc.
USGS	United States Geological Survey
VERIZON	Verizon Communications (Formerly General Telephone & Electronics
WATCH	Work Area Traffic Control Handbook
WCLIB	West Coast Lumber Inspection Bureau
WCRSI	Western Concrete Reinforcing Steel Institute
WIC	Woodwork Institute of California
WRI	Wire Reinforcement Institute
WWPA	Western Wood Products Association

1.2 REFERENCE STANDARDS

A. Applicable Publications: Whenever in these Specifications / Project Manual references are made to published specifications, codes, standards, or other requirements, it shall be understood that wherever no date is specified, only the latest specifications, standards, or requirements of the respective issuing agencies which have been published as of the date that the Work is advertised for bids shall apply; except to the extent that said standards or requirements may be in conflict with applicable laws, ordinances or governing codes. No requirements set forth herein or shown on the Drawings shall be waived because of any provision of, or omission from, said standards or requirements.

B. Specialists' Assignments: In certain instances, specification text requires (or implies) that specific work is to be assigned to specialists or expert entities, who must be engaged for the performance of that work. Such assignments shall be recognized as special requirements over which the CONTRACTOR has no choice or option. These requirements shall not be interpreted so as to conflict with the enforcement of building codes and similar regulations governing the Work; also they are not intended to interfere with local union jurisdiction settlements and similar conventions. Such assignments are intended to establish which party or entity involved in a specific unit of work is recognized as "expert" for the indicated construction processes or operations. Nevertheless, the final responsibility for fulfillment of the entire set of contract requirements remains with the CONTRACTOR.

C. Codes and Safety Standards: Without limiting the generality of other requirements of the Specifications, all work specified herein shall conform to or exceed the applicable requirements of the following Codes and Safety Standards.

1. Applicable Codes:

- City of Los Angeles Building Code
- City of Los Angeles Mechanical Code
- City of Los Angeles Plumbing Code
- City of Los Angeles Fire Code
- City of Los Angeles Electrical Code

References herein to "Building Code" shall mean City of Los Angeles Building Code. Similarly references to "Mechanical Code," "Plumbing Code," "Fire Code," and "Electric Code" shall mean City of Los Angeles Mechanical Code, City of Los Angeles Plumbing Code, City of Los Angeles Fire Code, and City of Los Angeles Electric Code respectively.

2. Applicable Safety Standards:

- OSHA Regulations for Construction
- OSHA Standard
- Cal-OSHA

References herein to "OSHA Regulations for Construction" shall mean Title 29, Part 1926, Construction Safety and Health Regulations, Code of Federal Regulations (OSHA), including all changes and amendments thereto.

References herein to "OSHA Standards" shall mean Title 29, Part 1910, Occupational Safety and Health Standards, Code of Federal Regulations (OSHA), including all changes and amendments thereto.

References herein to "Cal-OSHA" shall mean State of California, Department of Industrial Relations, as amended to date, and all changes and amendments there to which are effective as of the date of construction.

The latest edition of the codes as approved and adopted for use by the CITY as of the date of award shall apply to the Work herein, including all addenda, modifications, amendments, or other lawful changes thereto.

D. Standard Specifications: References in the Contract Documents to "Standard Specifications" shall mean the Standard Specifications for Public Works Construction, including all current supplements, addenda, and revisions thereof.

E. Standard Plans: References herein to "Standard Plans" shall mean the Standard Plans issued by the City of Los Angeles which drawings are hereby

incorporated in and made a part of these Contract Documents, and copies of which are available for a fee.

F. Conflict between Codes, Safety Standards, Reference Standards, Drawings and other Contract Documents: In case of conflict between codes, reference standards, drawings and other Contract Documents, the most stringent requirements shall govern. All conflicts shall be brought to the attention of the ENGINEER for clarification and directions prior to ordering or providing any materials or labor. The CONTRACTOR shall bid for the most stringent requirements.

(END OF SECTION)

SECTION 01112
DESCRIPTION OF WORK

PART ONE -- GENERAL

1.1 SUMMARY

A. The work to be done under this Contract includes the furnishing of project management, labor, materials, tools and equipment for construction at the sites for the City of Los Angeles, all in accordance with the Contract Documents, including the GENERAL CONDITIONS, DIVISION 1 - GENERAL REQUIREMENTS and other Sections of the Project Manual.

1.2 GENERAL SCOPE OF WORK

A. Work In This Contract: Work in this Contract includes all labor, materials and equipment necessary for construction at the sites as noted on the Contract Drawings and in the Project Manual and all other Contract Documents including the GENERAL CONDITIONS and GENERAL REQUIREMENTS.

B. Work Not In This Contract: "Work not in this Contract," "Work by others" and "Work by others but arranged and paid for by CONTRACTOR" are listed as follows:

1. All work or equipment indicated on the Contract Drawings or in this Project Manual as "Not in Contract" or "N.I.C." or anything which implied exclusion from the Contract in any manner.

2. All work or equipment indicated on the Contract Drawings or in this project as "work by others," and "work by others, but arranged and paid for by CONTRACTOR." The CONTRACTOR shall provide all necessary coordination, arrangement, and scheduling in accordance with General Conditions and other Sections of this Project Manual. CONTRACTOR shall appropriately pay for all charges, fees and costs specified to be paid for by the CONTRACTOR.

3. Department of Water and Power shall furnish and install any temporary water or power utility relocation. CONTRACTOR shall make all necessary arrangement and pay for all fees and charges.

4. Permanent Water Meter and Service Line: CONTRACTOR shall arrange for installation of permanent meter and water service line by the Department of Water and Power at their convenience, and CONTRACTOR shall pay all fees and charges. Construction light, power and water to be provided and paid for by the CONTRACTOR in accordance with the GENERAL REQUIREMENTS.

5. Permanent Gas Meter and Service line: CONTRACTOR shall arrange for installation of permanent meter and gas line by the Southern California Gas Company and shall pay for all fees and charges.

C. Related Work:

1. Documents affecting work of this Contract include, but are not limited to, the GENERAL CONDITIONS, DIVISION 1 - GENERAL REQUIREMENTS, and other Sections of the Project Manual.

1.3 PROJECT IDENTIFICATION

A. General:

1. The Project Name is Avon Street (1923) Bulkhead. W.O. E1909302.

2. Contract Documents have been prepared by the Bureau of Engineering.

3. Project Manual and Contract Drawings are prepared under the procedures for work by Pre-Qualified On-Call construction contractors.

B. The extent of Contracted Work is indicated on the Contract Drawings and in the following Sections of the Project Manual.

1. Division 1 – General Requirements
2. Division 2 - Sitework
3. Division 3 – Concrete
4. Division 5 – Metals
5. Division 6 – Wood and Plastics

C. In addition to provisions noted in Section 01112 – DESCRIPTION OF WORK in Division 1 GENERAL REQUIREMENTS, plans referenced as part of the advertised bid package are included as, but not limited to, a part of the Contract Documents.

1.4 SUMMARY OF REFERENCES

A. Contracted Work can be summarized by references to the Contract General Conditions, Sections in the Project Manual, Contract Drawings, Addenda, Notice to Bidders and Modifications to the Contract Documents.

B. It is recognized that the Contracted Work may also be unavoidably affected or influenced by other governing codes and Regulations, natural phenomenon, including weather conditions and other forces outside the Contract Documents.

1.5 GROUND BREAKING CEREMONY

The Ground Breaking Ceremony for this project may be requested and may occur before the Notice-to-Proceed is issued. The CONTRACTOR shall include in the contract cost and verify with the ENGINEER the ceremony schedule after the award of the contract. The CONTRACTOR shall prepare, after the award of the contract, all submittals for the construction sign and secure all necessary approvals. The CONTRACTOR shall provide necessary coordination for the Ground Breaking Ceremony, occurring before or during the construction at no additional cost to the CITY.

(END OF SECTION)

SECTION 01113
DIVISIONS OF TECHNICAL SECTIONS OF PROJECT MANUAL

1.1 THE REQUIREMENT

A. The Technical Section of the Project Manual, including the General Conditions and General Requirements, are arranged into the Construction Specifications Institute (C.S.I.) sixteen (16) Divisions - Section format with an additional Division 17 for Instrumentation and Controls. Each "Section" constitutes a unit of work and related "Sections" are grouped under broad generic headings called Divisions.

B. The organization of the Technical Sections of the Project Manual into Division, Sections, and articles shall not control or limit the CONTRACTOR in dividing the work among Subcontractors, a Sub-subcontractor, or to establish the extent of work to be performed by any trade. The CONTRACTOR shall be solely responsible for all subcontract arrangements of work regardless of the Project Manual organization.

(END OF SECTION)

SECTION 01114
ISSUANCE OF DRAWINGS AND THE PROJECT MANUAL

1.1 THE REQUIREMENT

A. Unless otherwise provided in the Contract Documents, the ENGINEER will furnish to the CONTRACTOR one (1) set and one (1) CD containing each of the Drawings, Project Manual and, where applicable, Geotechnical Data Report (GDR) without charge. Additional sets desired by the CONTRACTOR or Subcontractors will be furnished upon request, but at the CONTRACTOR'S expense.

B. All Drawings, Specifications, Special Provisions, and copies thereof are the property of the CITY. They are not to be used on other work. All necessary bid documents will be available to prospective bidders.

(END OF SECTION)

SECTION 01115
MANDATORY PROVISIONS

1.1 THE REQUIREMENT

A. Any mention in the Divisions of this Project Manual which follow the General Requirements or indication on drawings of articles, materials, operations, or methods requires that the CONTRACTOR provide each item mentioned or indicated, of quality or subject to qualifications noted; perform according to conditions stated, each operation the same prescribed; and provide therefore all necessary labor, equipment, and incidentals, even though such mention of articles, materials, operations, methods, quality, qualifications, or conditions is not expressed in complete sentences.

(END OF SECTION)

SECTION 01116
ELECTRONIC DOCUMENT CONTROL

1.1 USE OF ELECTRONIC DOCUMENT CONTROL SYSTEM

A. The CONTRACTOR shall use the City's cloud-based electronic document control system to submit and receive all construction related documentation on this project. The system used is "e2020" and all costs associated with the use of the software have been paid for by the City. The website address to be used will be provided by the ENGINEER after award of the contract. The CITY will provide training to the CONTRACTOR on the use of the system. As coordinated with other sections of these project specifications, the information to be generated, transmitted and tracked by the e2020 document control system shall include, but not be limited to the following:

1. Correspondence (including Engineer's Communication).

2. Plan Clarifications.

3. Requests for Information (RFI's).

4. Submittals & Shop Drawings.

5. Change Orders.

6. Allowance Orders.

7. Progress Photos.

8. Project Schedules.

9. Meeting Minutes.

10. Permits.

11. Partnering (Issue Resolution Ladder, Charter).

12, Claims Resolution.

13. Building Information Modeling Coordination.

B. When hard copies of drawings or product samples are required to be submitted that cannot be submitted through e2020, the CONTRACTOR shall:

1. Upload a transmittal sheet for the submittal in e2020,

2. Submit six (6) full-size hard copies,

3. Submit one half-sized hard copy (not exceeding 11x17 inches),

4. Transmit electronic files to the ENGINEER in Adobe Acrobat (.PDF) format.

C. The CONTRACTOR shall be responsible for the installation of its own computer system and scanner. In addition, the CONTRACTOR shall be responsible for the procurement of an Internet Service Provider (ISP) with a high-speed broadband internet connection for its own use, as well as the ENGINEER's/INSPECTOR's use at the site offices to access the document control system.

D. At the request of the ENGINEER, the CONTRACTOR must provide a hard copy of approved submittals to the INSPECTOR, at no additional cost to the CITY.

(END OF SECTION)

SECTION 01120
INTERFACE / COORDINATION REQUIREMENTS

1.1 THE REQUIREMENT

A. Traffic and Access

1. The CONTRACTOR'S operations shall cause no unnecessary inconvenience. The access rights of the public shall be considered at all times. Unless otherwise authorized, traffic shall be permitted to pass through the Work, or an approved detour shall be provided.

2. Safe and adequate pedestrian and vehicular access shall be provided and maintained to: residences; fire hydrants; commercial and industrial establishments; churches, schools and parking lots; service stations and motels; hospitals; police and fire stations; and establishments of similar nature. Access to these facilities shall be continuous and unobstructed unless otherwise approved by the ENGINEER.

3. The CONTRACTOR shall provide and install steel plates to bridge any excavation in the public right-of-way. Such bridging shall be in accordance with the provisions of the latest edition of the Work Area Traffic Control Handbook (WATCH), and in addition, shall have a nonskid surface with coefficient of friction of 0.35 per California Test 342 for all steel plates within the traveled roadway of streets and alleys. When required by the INSPECTOR, the CONTRACTOR shall certify in writing to the INSPECTOR that steel plates to be used in the Work meet the required static coefficient of friction. Also, when required by the INSPECTOR, the CONTRACTOR shall have steel plates to be used in the Work tested in accordance with the above standards for the verification of required static coefficients of friction. Testing shall be done by an independent laboratory approved by the INSPECTOR. The CONTRACTOR shall pay for any costs associated with the testing of steel plates.

4. At least ten (10) days before the start of construction, the CONTRACTOR is required to notify, in writing, abutting property occupants of the proposed construction start date. A copy of said written notification shall be provided to the INSPECTOR.

5. The CONTRACTOR shall notify the MTA Special Events Desk at (213) 922-4632, (213) 922-4692(Fax) at least forty-eight (48) hours before any work that will affect normal bus operations. If no answer, call MTA Dispatch at any time, (213)-922-4634.

6. Safe and adequate pedestrian zones and public transportation stops, as well as pedestrian crossings of the Work at intervals not exceeding 90m (300 feet), shall be maintained unless otherwise approved by the ENGINEER. If required by the construction, the CONTRACTOR may close only one crosswalk at a time at intersections having four crosswalks. If construction requires closure of two or more crosswalks at an intersection, the CONTRACTOR shall obtain LADOT approval before implementation of the closure. LADOT approval is required prior to closing of any crosswalk at intersections having fewer than four crosswalks.

7. Vehicular access to residential driveways shall be maintained to the property line except when necessary construction precludes such access for reasonable periods of time. If backfill has been completed to the extent that safe access may be provided, and the street is opened to local traffic, the CONTRACTOR shall immediately clear the street and driveways and provide the maintained access.

8. The CONTRACTOR shall cooperate with the various parties involved in the delivery of mail and the collection and removal of trash and garbage to maintain existing schedules for these services.

9. Grading operations, roadway excavation and fill construction shall be conducted by the CONTRACTOR in a manner to provide a reasonably satisfactory surface for traffic. When rough grading is completed, the roadbed surface shall be brought to a smooth, even condition satisfactory for traffic.

10. Work shall be performed in only one-half of the roadway at one time. One-half of the roadway shall be kept open and unobstructed until the opposite side is ready for use by traffic. The CONTRACTOR shall phase the removal operations so as to maintain the specified traffic lanes on the existing pavement until sufficient new pavement is constructed to accommodate the traffic requirements. If one-half of a street is only being improved, a smooth, even surface and a condition satisfactory for traffic shall be maintained on the other one-half.

11. Where no pavement exists in a roadway, and traffic is to be maintained through the Worksite, the CONTRACTOR shall conduct its operations in a manner to provide a smooth, even surface satisfactory for traffic, reasonably free of mud and dirt.

12. The CONTRACTOR shall include in its Bid all costs for the above requirements.

B. Street Closures, Detours, Barricades

1. The CONTRACTOR shall comply with all applicable State, County and CITY requirements for closure of streets. The CONTRACTOR shall provide barriers, guards, lights, signs, temporary bridges, flagpersons, and watchpersons. The CONTRACTOR shall be responsible for compliance with additional public safety requirements that may arise. The CONTRACTOR shall furnish and install signs and warning devices and promptly remove them upon completion of the Work.

2. The CONTRACTOR shall obtain and pay for all permits for closure of streets, alleys or sidewalks, as required by the Bureau of Street Services (800) 996-2489 and LADOT (213) 972-4990**.**

3. At least forty-eight (48) hours in advance of closing, partially closing, or reopening any street, alley, or other public thoroughfare, the CONTRACTOR shall notify the Police, Fire, Traffic, and Engineering Departments, and comply with their requirements. Deviations must first be approved in writing by the ENGINEER.

4. When specified on the Plans or permit, the CONTRACTOR shall install advance construction notice signs per Standard Plan S-791, not less than seven (7) days before the start of construction. The CONTRACTOR

shall maintain the signs for the duration of construction, removing them only after completion of the work. All costs incurred in furnishing, installing, maintaining and removing the signs shall be included in the CONTRACTOR'S Bid.

5. The CONTRACTOR shall secure approval, in advance, from authorities concerned with the use of temporary bridges proposed by the CONTRACTOR for public use. Temporary bridges shall be clearly posted as to load limit, with signs and posting conforming to current requirements covering "signs" as set forth in the California Manual of Uniform Traffic Control Devices (MUTCD). (The California MUTCD is available on the internet at https://dot.ca.gov/programs/trafficoperations/camutcd/camutcd-rev4. This manual shall also apply to street closures, barricades, detours, lights, and other safety devices that may be required.

6. The CONTRACTOR shall comply with the requirements of the latest adopted edition of the "Work Area Traffic Control Handbook", obtainable from Building News, Inc., 10801 National Blvd., Los Angeles, CA 90064, (800) 873-6397 or the LADOT Worksite Traffic Control Plan (S-488.0) available from LADOT, 100 S. Main Street, 9th Floor, Los Angeles, CA 90012.

7. A street with local traffic crossing a street in which Work is being performed may be closed to traffic, providing the adjacent cross streets are kept open. The CONTRACTOR shall notify the Police and Fire Departments whenever such a street is to be closed to traffic. A similar notification shall then be made at the time the street is again opened to traffic. If the closing is to be of short duration or different sections of the street are to be closed at different times, the notification to the Police and Fire Departments shall be on a day-by-day basis, giving information regarding the conditions expected to prevail on the next working day. The CONTRACTOR shall notify the INSPECTOR which streets are to be closed, duration of closures, and person(s) and telephone numbers contacted in the Fire and Police Department.

8. All signs, including offsite detour signs, lights, or devices installed by the CONTRACTOR shall conform to the California Manual of Uniform Traffic Control Devices (MUTCD), and be approved by LADOT before use. Offsite detour signs shall be installed, maintained, and removed by the CONTRACTOR. "No Parking" signs shall be posted and removed only by LADOT upon request from the CONTRACTOR. LADOT will charge and collect its actual cost for each temporary sign installed and for each sign replaced during the authorized period. To be enforceable, temporary "No Parking" signs shall be installed by LADOT twenty-four (24) hours before the time when needed. Their removal by LADOT shall take place as the Work progresses to restore parking spaces. **See Section 01313 – WORK BY CITY OR OTHERS of the GENERAL REQUIREMENTS.**

9. The CONTRACTOR shall include in its Bid all costs for the above requirements.

END OF SECTION

SECTION 01140
CONTRACTOR'S USE OF THE PREMISES

1.1 THE REQUIREMENT

A. General

1. This Section applies to all situations in which the CONTRACTOR or his representatives, including but not necessarily limited to, suppliers, Subcontractors, employees and field engineers, who enter upon the CITY'S property.

2. CONTRACTOR shall commence the Contract Work and provide security and protection to existing facility and job site within 5 days from the issuance of Notice-To-Proceed letter, unless noted otherwise.

B. Access to the Job-site

1. As instructed by the ENGINEER, the CONTRACTOR shall restrict CONTRACTOR'S employees to the immediate Work areas on the job-site and in no way go beyond the Work limits noted on the Contract Drawings or as otherwise directed by the ENGINEER.

2. Use of such accesses to the job-site will only be for the purpose of parking, delivery and/or removal of materials equipment, tools, vehicles and removal of rubbish and debris, and shall be kept free of obstructions and in a safe condition at all times during extent of Contracted Work.

3. Use of crane, equipment and/or man lift, catwalk/platform to transport materials, equipment, supplies and the CONTRACTOR'S personnel to the Work area shall be in conformance with the requirements of the local governing agencies. The CONTRACTOR shall furnish the CITY with a duplicate copy of the operating permit of the equipment prior to its use.

4. If any of the crane, equipment and/or man lift, catwalk platform is attached to the existing structure specified to remain, CONTRACTOR shall provide shop drawings, including the equipment data, the attachment details, structural calculation and erection plans to the ENGINEER for approval.

C. Contractor's Use of the Premises

1. All items, materials and equipment remaining in the existing structures and on the premises (job site) shall become the property of the CONTRACTOR and shall be removed from the job site. The CITY makes no claims or assumes any value in any of these items, materials and/or equipment if they are removed from the structures or the job site or vandalized prior to and/or during the Contract period. The CITY assumes no responsibility for any additional operation or works as a result of the conditions described herein.

D. Parking

1. No parking of CONTRACTOR'S vehicles will be allowed on the job-site except for the purposes of unloading and/or loading as directed by the ENGINEER. CONTRACTOR shall not use new paved areas for loading or unloading. All traffic controls in the Work area shall conform to the Work area Traffic Control Handbook (WATCH), latest edition, and the California Manual of Uniform Traffic Control Devices (MUTCD). (The California MUTCD is available on the internet at https://dot.ca.gov/programs/traffic-operations/camutcd/camutcd-rev4).

2. CONTRACTOR'S employees are advised to park on adjacent CITY streets and shall observe CITY parking restrictions posted on such streets.

3. CONTRACTOR shall obtain and pay for a "Street Use Permit" in order to park his vehicles, equipment and CONTRACTOR'S Field Office at Street Division, Bureau of Street Services, [1149 S. Broadway, Suite 400, (800) 996-2489]. Such "Street Use" shall be fenced off from street traffic as required. Upon completion of Contracted Work, such street area shall be left in a clean and safe condition ready for use by the public. Wherever CONTRACTOR and CONTRACTOR'S employees' vehicles are located on the street or "Street Use" area or on the job-site, all such vehicles shall be kept locked at all times.

4. Unless specified otherwise, the CONTRACTOR is responsible to lock up all gates and open all gates**.**

E. Security

1. Restrict the access of all persons entering upon the CITY'S property in connection with the Contracted Work to the Access Route and to the actual site of the work.

2. CONTRACTOR shall furnish and maintain adequate site security protection, as directed by the ENGINEER, INSPECTOR or other authorities having jurisdiction, at no additional cost to the CITY.

F. Protections

1. Required: Where necessary for the safety of the public and the protection of the adjacent street improvements and adjacent properties, provide and maintain adequate protection, fences and gates and barricades to separate Work areas from areas outside the job-site limits**.** Such protections shall comply with provisions of Section 01120 – INTERFACE / COORDINATION REQUIREMENTS and Section 01721 – MOBILIZATION of the GENERAL REQUIREMENTS, and shall remain in place during extent of this Contract or as otherwise directed by the INSPECTOR.

2. CONTRACTOR shall provide protections, barricades, signs, etc., as necessary so that persons will be protected from the Work areas where trenching and excavations occur for foundation, underground utilities, underground fuel storage tanks etc. on the job-site. Upon completion of

such work operations, such protections shall be removed. Such protections shall not disrupt the job-site.

3. All equipment, material, soil, debris and any heavy loaded object shall not be stock piled in adjacent area to create any surcharging to the trench or excavation.

4. Protection of Existing Building and Site Conditions:

   a. Construct and maintain a suitable type partition, approved by the ENGINEER, to prevent dust, noise and any other nuisance to occupants within areas adjacent to the Work area(s) of this Project.

   b. Protect existing surfaces in areas where work of this Contract is being performed or passed through for access to the Work areas from damage in a manner approved by the ENGINEER. Take all necessary precautions to protect and preserve the integrity of all existing work. Any damage will be subject to requirements hereinafter specified. Submit protection plans or details as required by the ENGINEER.

G. Repair of Damages

1. Required: Repair or replace any damage to existing structures and equipment located inside or outside the building under CONTRACTOR'S protection.

2. Methods: Repair or replace damaged work with new materials as necessary to restore the damaged areas or surfaces to a condition equal to and matching such conditions existing prior to damage or start of Work of this Contract, to the full satisfaction of the ENGINEER, and at no added cost to the CITY. Submit repair method for approval as required by the ENGINEER.

3. Matching or Existing Work:

   a. Finish of all existing wood, plaster, masonry and/or concrete work indicated on the Drawings to be altered, repaired or patched to match and be flush with adjoining surfaces, subject to the approval of the ENGINEER.

   b. Finish of all new masonry and/or concrete work (to adjoin remaining work) to match and be flush with adjoining surfaces, unless otherwise noted on the Drawings, subject to the approval of the ENGINEER.

H. Non-interference With Others

1. CONTRACTOR shall confine Contracted Work operations to the immediate boundaries of the job-site and shall execute work operations in a manner to minimize interference with CITY operations and/or work operations of other CONTRACTORS working on the premises; as directed by the ENGINEER.

2. CONTRACTOR shall provide and maintain adjacent pedestrian and vehicular accesses in accordance with Work area Traffic Control Handbook (W.A.T.C.H.), latest edition, and the California Manual of Uniform Traffic Control Devices (MUTCD).

3. CONTRACTOR shall obtain approval of ENGINEER and local authorities having jurisdiction such as Department of Transportation, Police Department, Bureau of Street Services, etc. prior to any street, alley or sidewalk closure.

I. Underground Service Alert

1. Before commencing any excavation, the CONTRACTOR shall obtain an underground service alert inquiry I.D. Number by calling 1 (800) 422-4133. Two (2) working days shall be allowed after the I.D. Number is obtained and before the excavation work starts so that utility owners can be notified. The I.D. Number must be reported to the Bureau of Contract Administration when calling for inspection. I.D. Numbers will not be given more than ten (10) calendar days prior to starting excavation work.

J. Job Safety

1. CONTRACTOR shall observe all safety rules and regulations of the Los Angeles City Building Code and CAL/OSHA as applicable to the safety of the CONTRACTOR, CONTRACTOR'S personnel and CITY employees during Contracted Work operations and especially during asbestos removal operations.

END OF SECTION

SECTION 01150
STORAGE OF MATERIALS AND EQUIPMENT

1.1 THE REQUIREMENT

A. All materials and equipment shall be stored and protected in accordance with the manufacturer's instructions, with seals and labels intact and legible. Store sensitive products in weatherproof, climate controlled enclosures. Where indoor storage is required, the equipment shall be stored inside a completely enclosed building, with the temperature controlled between 60 degrees Fahrenheit and 100 degrees Fahrenheit (60°F – 100°F) and a maximum relative humidity of ninety percent (90%) noncondensing.

B. For exterior storage of material or equipment, the materials or equipment shall be placed on sloped supports above ground. Material or equipment subject to deterioration shall be covered with an impervious covering. Where necessary ventilation and heating shall be provided to avoid condensation.

C. The CONTRACTOR shall exercise all measures necessary to ensure preservation of the quality, quantity, and fitness of the materials or equipment and shall perform the manufacturers recommended maintenance of the material or equipment.

D. The CONTRACTOR shall inspect the material and equipment, and submit a written monthly report to the INSPECTOR listing all the equipment stored, the results of their inspection, and the maintenance performed.

E. The materials and equipment shall not show signs of pitting, rust, decay or other deleterious effects of storage when incorporated in to the work.

F. Pumps, motors, electrical equipment, and other equipment with anti-friction or sleeve bearings shall be stored in weather tight structures maintained at a temperature above sixty degrees Fahrenheit (60°F). Electrical equipment, controls, and insulation shall be protected against moisture and water damage. All space heaters furnished in electrical equipment shall be immediately energized and operated continuously until the equipment is placed into service.

G. The CONTRACTOR shall grant the INSPECTOR and ENGINEER access to the storage facility at any time and assist the INSPECTOR and ENGINEER in conducting a full view, piece by piece, inventory of all such material or equipment.

H. The CONTRACTOR shall absorb any and all cost incurred to store, protect, and maintain the materials and equipment without modification to the Contract amount.

I. For CITY furnished equipment delivered to the site, the CONTRACTOR shall take all necessary measures to protect the equipment from damage due to the CONTRACTOR’s activities. The CONTRACTOR shall also ensure that all measures required by the CITY’s vendor to preserve and protect their equipment are maintained and are not disturbed including, but not limited to, providing for the continuous operation of space heaters furnished in electrical equipment.

(END OF SECTION)

SECTION 01211
ALLOWANCE FOR EQUIPMENT SUBSTITUTIONS FOR COMPATIBILITY PURPOSES

1.1 THE REQUIREMENT

A. An allowance for equipment upgrade purposes has been established in the Proposal for this Contract. In the event that the CITY determines that items of equipment proposed for use by the CONTRACTOR do not meet the needs of the CITY, and the CITY directs the CONTRACTOR to substitute other pieces of equipment, then this allowance may be used. The substitution of equipment must be directed by the CITY in writing and must specifically be identified as substitutions due to compatibility of equipment. In this event, and provided that the CONTRACTOR can clearly document an increase in cost, then such cost increase may be paid for from this allowance through the issuance of an Allowance Order; provided that there is a specific written approval of the CITY. Any monies paid from this allowance shall not result in the need to issue a Change Order. It is agreed that this allowance shall only be used to pay for direct cost differences in the cost of equipment. If the CITY rejects a piece of equipment proposed for use by the CONTRACTOR because the equipment, in the sole judgment of the ENGINEER, does not meet the requirements of the Contract Documents, the CONTRACTOR shall not have any claim against this allowance. This bid item is an allowance and is subject to an upward or downward adjustment by a Change Order, at the end of the project, to reflect the actual costs expended. Such adjustment is not subject to markup.

(END OF SECTION)

SECTION 01212
FIXED CASH ALLOWANCE ITEMS

1.1 THE REQUIREMENT

A. A fixed cash allowance has been allocated to each of the following items of the Bid Breakdown (see Bid Proposal). Requirements for each Fixed Cash Allowance Item are specified in the GENERAL REQUIREMENTS (GR) section referenced below. Overhead and Profit, at the rates listed below, shall be added to the actual invoiced amount.

Bid Item No.	Description	Overhead and Profit
2.	Allowance for Differing Site Conditions (GR Section 01212 & 01253)	Per Sec. 01254
3.	Allowance for Unforeseen Utilities (GR Section 01212)	Per Sec. 01212
4.	Allowance for Additional Potholing (GR Section 01732)	Per Sec. 01732

B. If these items are not executed, or are only partially executed, or the allowance for any item is not expended or partially expended, then a deductive Change Order shall be issued for the amount that is not expended. If, however, these items are over expended (with ENGINEER'S prior approval), then an appropriate Change Order shall be executed in accordance with the provisions of the GENERAL REQUIREMENTS Section 01254 –- CHANGE ORDERS, except for Overhead and Profit wherein the above listed rates shall apply.

C. The ENGINEER’S AND INSPECTOR’S field office supply allowance is to be used at the ENGINEER’S and/or INSPECTOR’S discretion to purchase office supplies and/or office equipment, perform repairs to field offices or equipment owned or leased by the City, pay field office utility bills, purchase reference documents, etc. The items covered by this allowance are in addition to those required to be furnished by the CONTRACTOR under GR Section 01721-Mobilization. The CONTRACTOR shall be reimbursed the actual invoice amount plus the markup allowed by Section A, above.

(END OF SECTION)

SECTION 01251
CHANGE ORDER REQUESTS

1.1 THE REQUIREMENT

A. All quotations for preliminary change orders for extras, changes, additions, or deletions to the Work as described in CHANGES AND EXTRA WORK of the GENERAL CONDITIONS shall be submitted to the ENGINEER, in writing, on the Change Order Cost Quotation Form provided by the ENGINEER, and in conformance with the requirements of CHANGE ORDERS of the GENERAL REQUIREMENTS (See Attachment 01251-A1). The quotation shall be firm for a period of not less than sixty (60) calendar days from the date of receipt of the quotation by the ENGINEER. The CONTRACTOR shall submit its written cost quotation and Time Impact Analysis not later than fifteen (15) days after being requested to provide such quotation, unless the ENGINEER allows more time. Delays in submitting quotations beyond the fifteen (15) days set forth herein, which cause a delay in the issuance of a Change Order or a delay to the completion date of the project, shall not be cause for a claim or a time extension under the Contract.

B. The ENGINEER'S request for quotation on a preliminary change shall not be considered authorization to proceed with the changed work prior to the issuance of a final Lump Sum or Time & Material Change Order, unless directed otherwise, in writing, by the ENGINEER, nor shall such request constitute justification for a delay to the existing Work or a time extension under the Contract.

(END OF SECTION)

(SEE ATTACHMENT)

ATTACHMENT TO SECTION 01251

Attachments to General Requirements Section 01251 consists of one (1) document, as follows:

ATTACHMENT NUMBER	TITLE OF ATTACHMENT	NUMBER OF PAGES IN THIS ATTACHMENT
01251-A1	Change Order Cost Summary Form	1

Change Order Cost Summary Form

		Direct Labor	Direct Materials	Direct Equipment		Totals
(1):	Lump Sum Work by Prime Contractor	$	$	$		
(2):	"T&M" Work by Prime Contractor	$	$	$		
(3):	Subtotal - Direct Work (Prime Contractor)	$	$	$		
(4):	All Lump Sum Work by subcontractors (any tier)	$	$	$		
(5):	All "T&M" Work by subcontractors (any tier)	$	$	$		
(6):	Subtotal - Direct Work (all subcontractors)	$	$	$		$
					Add each of the three columns across and enter to the right.	
(3)+(6)=(7):	Total - Direct Costs	$	$	$		$
(8):	Markup	(20% of direct labor) $	(15% of direct mat'l) $	(15% of direct equip) $		$
(9):	Prime Contractor Markup for subcontractors				5% of line (6) direct sub work	$
(10):	Bonds & Insurance				1% of line (7) all direct work	$
(11):	Additional amount (if any) permitted by Contract					$
(12):	**GRAND TOTAL**				Add sums of lines) (7), (8), (9), (10) and (11)	$

SECTION 01253
DIFFERING SITE CONDITIONS

1.1 THE REQUIREMENT

A. During the course of construction, the CONTRACTOR may encounter existing utilities, structures, etc. that are not shown on the contract drawings or are not specified and which may interfere with or may impact construction activities. In the event of this occurrence, the ENGINEER may direct the CONTRACTOR to proceed with necessary exploratory or corrective work to alleviate the situation. The cost for such directed work shall be paid for under the bid item DIFFERING SITE CONDITIONS of the SCHEDULE OF WORK AND PRICES. Costs shall be calculated in accordance with Section 01254 CHANGE ORDERS, subsection TIME AND MATERIALS WORK, of the GENERAL REQUIREMENTS.

B. If the total cost of the Work directed under the DIFFERING SITE CONDITIONS clause is different from the amount set forth in the SCHEDULE OF WORK AND PRICES, the Contract Price shall be adjusted by a Change Order. The adjustment shall be the difference between the total actual cost and the amount included in the Bid, as either an additional amount due the CONTRACTOR or as a credit to the CITY, as appropriate.

(END OF SECTION)

SECTION 01254
CHANGE ORDERS

1.1 The Requirement

Payment to the Contractor, or credit to the City, for any change, addition, deletion or extra to the Work, or settlement of any Claim, covered by any Change Order, shall be determined by the methods set forth herein. The Engineer may change the Plans and Specifications, character of the Work, or quantity of Work provided the total net dollar value of all such changes, taking into consideration both additive and deductive changes, does not exceed twenty-five percent (25%) of the original Contract Price. (The total net dollar value requires that additive and deductive changes offset each other, and only after the total net dollar value of the changes exceeds 25% of the original Contract Price, will a Supplemental Agreement be required). Should it become necessary to exceed this limitation, the change shall be by written Supplemental Agreement between the Contractor and the City, which shall be executed by a Change Order.

Unless otherwise stipulated, “Unit Prices” and “Stipulated Prices” include all costs necessary to furnish, install and complete the Work. The “Unit Prices” and “Stipulated Prices” include all direct costs for labor, equipment and materials, all insurance and bond costs, all field and office supervisors and assistants, all onsite project administration, security costs, the cost of small tools and consumables, incidental job burdens, and all general home office expenses and no separate allowance will be made therefor. Assistants to field and office supervisors include all clerical, stenographic, and general office help. Incidental job burdens include, but is not limited to, office equipment and supplies, temporary toilets, telephone, utilities, safety equipment, warning devices, personal protective equipment, and conformance to OSHA requirements. Project administration includes, but is not limited to, review and coordination, estimating, engineering, scheduling, and expediting relative to Change Orders, and updating and furnishing Record Drawings to incorporate changes, schedule update, supervision not applied solely to the Work of the Change Order, home office salaries and expenses, and City of Los Angeles Business Tax.

A. Unit Prices

Unit prices stipulated in the Schedule of Work and Prices (Bid) or itemized in the approved Schedule of Values shall be utilized, where they are applicable and determined reasonable by the Engineer. In the event that the Change Order results in a change in the Bid quantity of more than twenty-five percent (25%), either increase or decrease, then either the Engineer or the Contractor may request a review of the unit price to determine if a new unit price shall be mutually determined by negotiation. Any new unit price mutually determined under this Subsection shall only apply to the units in excess of one hundred twenty five percent (125%) of the Bid quantity for overruns. In case of underruns, the new mutually determined unit price shall only apply to the units up to seventy-five percent (75%) of the Bid quantity. When the final quantity is less than 75% of the Bid quantity, the total payment for that item shall not be more than 75% of the Bid quantity times the Bid unit price.

At the City’s option, payment for Unit Price Work in excess of 125% of the Bid quantity, or less than 75% of the Bid quantity, will be made on a Time and Materials basis as provided in Subsection C if a new unit price cannot be agreed upon.

Renegotiated unit prices or unit prices for new items added to the Contract by Change Order shall be determined in accordance with Subsections B through G. Whether stipulated in the Bid, itemized in the approved Schedule of Values or renegotiated, the unit prices used for payment constitute the total adjustment with no further costs owed for overhead, impact, profit, delay or impact to unchanged portions of the Contract, or any

other reason. The unit price shall be full and final compensation as described in Subsection D.

The cost proposals for renegotiated unit prices shall be presented in accordance with the provisions of Subsections B through G. Should any Bid Item be deleted in its entirety, the amount bid for that Bid Item shall be subtracted from the total Contract amount. The Contractor shall be paid only for the actual cost incurred prior to the notification of such deletion for that Bid Item.

B. Lump Sum

The Engineer may initiate a change in the Work by issuing a Preliminary Change Order (PCO). A PCO will include a detailed description of the proposed additions, deletions, or revisions with supplementary sketches or revised Contract Drawings and/or Specifications, and will request from the Contractor a lump sum cost quotation and time impact analysis for the proposed Change Order Work. The Contractor shall submit its PCO cost quotation and time impact analysis, if applicable, to the City within 14 calendar days after receipt of a PCO. The Contractor shall summarize the total cost and furnish a breakdown of the proposed lump sum costs satisfactory to the Engineer in accordance with Subsections B through G. Such lump sum costs shall be full and final compensation as described in Subsection D. The Contractor's quotation shall conform to the requirements of Section 01251- Change Order Requests, and be submitted in the Change Order Cost Summary Form provided (see Attachment 01251-A1). The Change Order Cost Summary Form cannot be used to nullify or supersede any specification or contractual provision.

If the method or amount of payment cannot be agreed upon prior to performing the Change Order Work, the Engineer may issue a Unilateral Change Order in the amount determined reasonable by the Engineer for the Change Order Work and direct the Contractor to proceed immediately. The Engineer also has the option to issue a Time and Materials Change Order directing the Change Order Work be performed on a time and materials basis with the Contractor providing all labor, equipment, and materials necessary to complete the Change Order Work in a satisfactory manner and within a reasonable period of time. Estimates for lump sum quotations and accounting for Time and Materials Work shall be limited to direct expenditures necessitated specifically by the subject Change Order Work, and shall be segregated as follows:

1. Labor: The cost of labor shall include all employees of the Contractor or Subcontractor(s), up to and including working foremen, who are used in the actual and direct performance of the Change Order Work. Employees identified as superintendents or non-working foremen shall not be charged as labor on the Change Order Work. The labor rates used to price the Change Order Work shall be those listed on the Bureau of Engineering's website at http://eng.lacity.org/contractors/. The Change Order Labor Rates include State of California Prevailing Wages, Fringe Benefits (health & welfare, pension, vacation, training and other payments) as established by negotiated labor agreements, Payroll Taxes (FICA, Federal and State unemployment taxes) as established by law, and Insurance costs (Worker's Compensation and General Liability Insurance, but shall not include Automobile Liability Insurance, Umbrella or any other insurance costs). No other subcomponents of labor costs shall be considered, unless approved in writing by the Engineer.

   The Change Order Labor Rates are calculated using the most current published prevailing wage and fringe benefits determination, applicable to the Los Angeles County and the particular labor classification, from the State of California Director

of Industrial Relations. To the Total Base Hourly Wage Rate (Column D), will be added Payroll Taxes at 8.65% (Column E), and Worker's Compensation & General Liability Insurance at 13% (Column F) of the base wages (Columns A+B), respectively.

Copies of the prevailing wage and fringe benefit determinations are available on the internet at http://www.dir.ca.gov/OPRL/PWD/. Payment to a craft of classification not shown on the prevailing wage rate determinations shall comply with the rate of the craft or classification most closely related to it.

The Engineer may approve a higher markup for insurance by review of current invoice(s) of insurance premium, as prepared by insurance companies for the Contractor or its Subcontractors at all tiers, to be submitted by the Contractor within ten (10) working days after issuance of the Notice to Proceed.

Except when provided otherwise by specific labor agreements, the overtime compensation will be at 1.5 times for more than 8 hours per day and Saturday work (Column H) and 2 times for Sunday and Holiday work (Column I).

The labor cost is not allowed to be increased by using labor classifications with paygrades higher than necessary to accomplish the Change Order Work. Owners, business partners, stock holders, corporate officers, next of kin, relatives and other stake holders of the contracting company (whose classifications are directly chargeable to the project) may be chargeable to the Change Order Work, provided that these personnel/workers perform direct labor in accordance with their classification and have the approval of the Inspector. The rates shall not exceed the prevailing wage rate for the classification they are performing. Foreman/General Foreman classification shall include a premium not exceeding the allowable premium in the Master Labor Agreement over the highest prevailing wage he is supervising. All labor classifications considered for the work shall be presented to the City, via a submittal, for review and approval before change order work is performed.

Reimbursement at the computed Change Order Labor Rates is subject to verification by certified payroll.

2. Materials: The cost of materials used in performing the Change Order Work will be the direct cost, including sales tax and freight, to the purchaser, whether Contractor, Subcontractor or other forces, from the supplier thereof, except as follows:

   a. Cash or trade discounts available to the purchaser shall be credited to the City notwithstanding the fact that such discounts may not have been taken by the Contractor.

   b. For materials secured by other than a direct purchase and direct billing to the purchaser, the cost shall be deemed to be the price paid to the actual supplier as determined by the Engineer. Supplier markup, except for actual costs incurred in the handling of such materials, will not be allowed.

   c. Payment for materials from sources owned wholly or in part by the purchaser shall not exceed the price paid by the purchaser for similar materials from said sources on contract items or the current wholesale price for such materials delivered to the Jobsite, whichever price is lower.

d. If, in the opinion of the Engineer, the cost of materials is excessive, or the Contractor does not furnish satisfactory evidence of the cost of such materials, then the cost shall be deemed to be the lowest current wholesale price for the quantity concerned, delivered to the Jobsite less cash or trade discount. The City reserves the right to furnish materials for the Work and no claim shall be made by the Contractor for costs and profit on such materials.

e. For the purposes of this Section, a "Supplier" is defined as any person or persons, firm or business, who supplies materials of construction and/or permanent equipment, but who does not perform any portion of the Work of the Contract on site, for the Contractor, except that labor or labor supervision which may be required by some manufacturers as part of their equipment installation for warranty or other purposes.

3. Equipment: The cost of equipment shall include ownership, lease or rental costs, as well as operating costs, for individual equipment units whose replacement value is in excess of $1,000. Transportation and set up costs shall be included, but only if the equipment is imported to the worksite solely to perform work on the Changed/ Extra Work described in the Change Order and the Contractor can demonstrate that the changed work cannot or could not be performed economically with equipment already at the site. Equipment costs shall be determined in accordance with the requirements set forth in Subsection G.

4. Small tools, equipment, consumables and incidental costs: No separate payment will be made for the use of small tools or equipment with a replacement value of $1,000 or less. This applies to tools and equipment owned by the Contractor or its Subcontractors, at any tier. Also, no separate payment will be made for fuel, lubricants, tool or equipment repairs, tool or equipment maintenance, consumables, drinking water, sanitary facilities or other incidentals. These costs are already included as a part of Markup.

5. Subcontractor Costs, including their overhead and profit, provided that such costs are direct costs to the Contractor for performing the Change Order Work as set forth in Subsections B through G.

C. Time and Materials Work

The costs of all Changed/Extra Work submitted under the Time and Materials (T&M) method shall be formulated in accordance with the provisions of Subsections B through I.

Unless otherwise stipulated on the Change Order, the “Not-to-Exceed” amount for all T&M Change Orders is $25,000. The Contractor is responsible for tracking costs and for notifying the Engineer in writing when costs approach 50% and 75% of the “Not-to-Exceed” amount. In addition, if the Changed/Extra Work cannot be completed within the “Not-to-Exceed” limit, the Contractor shall notify the Engineer in writing, and in a timely manner, that the limit requires an increase. The City will only reimburse eligible costs up to the “Not-to-Exceed” amount.

The Contractor shall notify the Inspector at the beginning of each day when T&M Change Order Work is being performed. The Contractor shall notify the Inspector of the T&M Change Order Work being performed and describe the personnel involved, whether by Contractor forces or by its Subcontractors, at any tier. Failure to notify the Inspector prior

to the start of T&M Change Order Work serves as the Contractor's waiver to claim for compensation on that day.

For each day work is performed on the T&M Change Order, the Contractor shall submit a "Daily Report of Time and Material Work" to the Inspector. The "Daily Report" consists of Bureau of Contract Administration Form BCA-165 for labor supplied, and Form BCA-166 for equipment and materials supplied. The Inspector will only consider Forms that are properly completed as described below.

1. Separate forms must be used for labor and for equipment/materials.

2. Labor, equipment, material or expenditures that are not included on Bureau of Contract Administration Forms BCA-165 and/or BCA-166 are ineligible for payment. There will be no exceptions to this requirement. It is the responsibility of the Contractor to include any and all items of labor, equipment, or material for which it requests compensation for each day's work completed.

3. Information required on the Labor form shall include name of personnel, personnel classification, and only the number of hours worked on T&M Change Order Work for the day being reported. Since the overhead allowance already includes all necessary supervision, any hours for additional supervision or non-working foremen are ineligible for additional payment. The premium pay for a general foreman is eligible for payment only if the general foreman is a working foreman and a general foreman was required by a Union Labor Agreement or otherwise approved by the Inspector. The general foreman rate is eligible for payment only during the time that a general foreman was required for the T&M Change Order Work.

4. Information required on the Equipment/Material form shall include Contractor-owned equipment and/or tools, and rented equipment or tools for which compensation is requested. Information shall include the type of equipment, size of equipment, equipment identification number, appurtenances, and only the number of hours worked on the T&M Change Order Work.

5. The only allowable materials are materials delivered to the job site and/or incorporated only into the T&M Change Order Work. The allowable materials shall be listed on the Equipment/Material form for the day that they are delivered to the job site and/or incorporated into the T&M Change Order Work.

6. Delivery ticket(s) and/or bill(s) of lading for rental equipment and/or tools delivered to the site and/or material incorporated into the T&M Change Order Work for the day being reported must be attached with the T&M sheet for that day. No payment will be allowed for materials and/or rented equipment unless receipt(s) or bill(s) of lading is attached. If the request for payment is not substantiated by original vendor/supplier invoices, acceptable copies of original invoices, or other documentation acceptable to the Inspector, the City may establish the cost of the item(s) at the lowest possible wholesale price or rental rate applicable while the T&M Change Order Work was being performed.

7. Failure to submit the required "Daily Report of Time and Material Work" by the close of the next working day shall waive all rights for that day unless otherwise approved by the Inspector. Any T&M Change Order Work that cannot be substantiated by a "Daily Report", approved and signed by the Inspector, is ineligible for payment.

8. The Contractor is responsible for preparing the “Daily Report” for the T&M Change Order Work performed by its Subcontractors and submitting the forms to the Inspector on time.

9. The Contractor must have each “Daily Report” verified by the Inspector. After the “Daily Report” is approved by the Inspector, both the Contractor and Inspector sign the report. The original “Daily Report” is retained by the Inspector with a copy provided to the Contractor.

10. When the “Daily Report” is signed by the Inspector and the Contractor, it is binding on the Contractor and its Subcontractors.

11. When agreed to by the Inspector, the Contractor may submit a supplemental “Daily Report” for labor, materials, or equipment for which the Contractor requests compensation, but failed to list on the original daily report.

    a. These supplemental forms shall be marked “SUPPLEMENTAL”.

    b. Unless otherwise approved by the Inspector, the supplemental forms may only be submitted for approval up to two (2) working days following the date when the work was performed.

No payment will be allowed for labor, materials, or equipment included on T&M sheets not signed by the Contractor and the Inspector. Payment will not be allowed for labor, materials, or equipment included on T&M sheets signed by anyone other than the Inspector or the Inspector’s immediate supervisor.

D. General

It is the intent of the City to settle all Change Orders full and final at the time the Change Order is issued. Therefore, the following paragraph will be incorporated, in writing, on all Change Orders:

> “The compensation (time and cost) set forth in a Change Order comprises the total compensation due the Contractor, all Subcontractors, and all Suppliers, for the Work or change defined in the Change Order, including impact on unchanged work. By signing the Change Order, the Contractor acknowledges and agrees on behalf of himself, all Subcontractors, and all Suppliers, that the stipulated compensation includes payment for all work contained in the Change Order, plus all payment for the interruption of schedules, extended field overhead costs, delay, and all impact, ripple effect or cumulative impact on all other work under this Contract. The signing of the Change Order indicates that the Change Order constitutes full mutual accord and satisfaction for the change, and that the time and/or cost under the Change Order constitutes the total equitable adjustment owed the Contractor, all Subcontractors, and all Suppliers as a result of the change. The Contractor, on behalf of himself, all subcontractors, and all Suppliers, agrees to waive all rights, without exception or reservation of any kind whatsoever, to file any further claim related to this Change Order. No further claim or request for equitable adjustment of any type for any reasonably foreseeable cause shall arise out of or as a result of this Change Order or the impact of this Change Order on the remainder of the Work under this Contract.”

Costs which shall not be paid in Change Orders under this Contract include, but are not limited to, interest costs of any type; claim preparation or filing costs; legal expenses; the costs of preparing or reviewing proposed Change Orders or Change Order proposals;

lost revenue; lost profits; lost income or earnings; rescheduling costs; costs of idled equipment when such equipment is not at the site or has not yet been employed on the Work; lost earnings or interest on unpaid retainage; claims consulting costs; and the costs of corporate officer or staff visiting the site; any compensation due to the fluctuation of foreign currency conversion or exchange rates; loss of other business; changes in taxes or increased tax rates of any kind or any costs identified as unallowable under the provisions of the Federal Acquisition Regulations.

Extensions of time shall be based solely upon the effect of delays to the Work as a whole. Extensions of time shall not be granted for delays to the Work, unless the Contractor can clearly demonstrate, through analysis of the current updated schedule, that the delay to the Work as a whole arose or will arise from causes other than normal weather, beyond the control and without fault or negligence of the Contractor, or any Subcontractor, at any tier, and that such delays will, in fact, delay the progress of the Work as a whole. The Contractor shall not be entitled to a time extension unless it submits a Time Impact Analysis which is a calculation of the extent of the delay to the end date of the Work and which shows that the Work will be extended beyond the current Contract completion date. A Time Impact Analysis is a scheduling procedure which utilizes the networking techniques (fragnets) and a written analysis of the facts associated with the alleged delay to demonstrate the effect of the alleged delay on the critical path of the schedule. A "fragnet" is defined as a sequence of new activities and/or activity revisions that are proposed to be added to the existing current updated schedule to demonstrate (mathematically and graphically) the influence of the alleged delay on the end date of the Work and shall be the sole method for incorporating delays and impacts into the schedule. The objective of a Time Impact Analysis is to pinpoint, isolate, and quantify all time impact associated with a specific issue and determine its time relationship to current or future delays. Time extensions shall not be allowed for delays to parts of the Work that are not on the critical path of the currently approved monthly updated project schedule. Time extensions shall not be granted, nor delay damages of any kind whatsoever paid to the Contractor, until all available float, slack, or contingency time on the project is used and the end date of the Work is moved beyond the current, adjusted Contract completion date.

The cost summary, cost breakdowns and requests for cost reimbursement submitted by the Contractor (for delay, disruption, hindrance and interference associated with the changes, additions, deletions or extras) shall be itemized in a manner that, with mathematical certainty and without reliance upon probabilities or inferences, segregates the direct, actual reimbursable costs associated with each individual, change, addition, deletion, extra and (on an event-by-event basis) each individual delay or disruption event. Such cost summaries, breakdowns or requests shall not be based, in whole or in part, upon any methodology (such as “total cost” or “modified total cost” methodologies) that purports to calculate the Contractor’s additional costs of performance of the extra, change, addition or deletion (including without limitation the additional costs of delay, disruption or other impact) based on the difference between Contractor’s total actual Project or line item costs (with or without fee) and its original bid estimate for the Project or any original bid estimate line item. In connection with the foregoing, Contractor represents and warrants that it has the ability to generate and maintain complete and accurate cost accounting records that will reflect (i) the actual costs incurred or saved for each individual item of Extra Work, change, addition, deletion (including without limitation any costs of associated delay, disruption, interference, hindrance and the cumulative impact of each extra, change, addition, deletion on other parts of the Work); and, (ii) on an event-by-event basis, the effect of each delay or disruption that forms the basis of each request for extension of time, regardless of their scope, number, complexity, cumulative effect, or time of issuance or occurrence.

Except as provided in "Temporary Suspension or Delay of Work" of the General Conditions, Contractor shall have no right to recovery of any compensation, costs, expenses or damages resulting from delay, disruption, interference, or hindrance in the performance of the Work (including without limitation interruption of schedules, excess or extraordinary extended field and indirect overhead costs, loss of productivity and the impact, ripple or cumulative effect on other Work).

Contractor waives any claim or rights and remedies based on abandonment, quantum merit, rescission or other similar legal theory by reason of any of the following circumstances, which the Contractor acknowledges and agrees are within the reasonable contemplation of the parties: (i) changes, additions, deletions and extras to the Work after execution of the Contract and issued from time to time throughout the period of construction, regardless of their scope, number, cumulative value, or complexity, to correct errors, omissions, conflicts, and ambiguities in the Contract Documents, or to implement discretionary changes to the scope of Work requested by the City; (ii) the issuance and performance of changes, additions, deletions and extras in a manner that is not in sequence with the as-built or as-planned progress of the Work; (iii) changes due to Differing Site Conditions; (iv) suspensions of the Work or parts thereof, or limitations on access to portions or all of the Work, for the convenience of City or in the interests of the Project; (v) delay or disruption to the Work due to failure of the City, Engineer or Inspector to timely perform any contractual obligation.

E. Markups – Overhead and Profit

1. In addition to the direct expenditures specified for labor, materials and equipment in Subsection B, a fixed markup percentage will be paid for all overhead and profit, including: All insurance costs other than specifically mentioned in this Section, all field and office supervisors and assistants, all onsite project administration, security costs, the cost of small tools and consumables, incidental job burdens, and all general home office expenses and no separate allowance will be made therefor. Assistants to field and office supervisors include all clerical, stenographic, and general office help. Incidental job burdens include, but is not limited to, office equipment and supplies, temporary toilets, telephone, utilities, safety equipment, warning devices, personal protective equipment, and conformance to OSHA requirements. Project administration includes, but is not limited to, review and coordination, estimating, engineering, scheduling, and expediting relative to Change Orders, and updating and furnishing Record Drawings to incorporate changes, schedule update, supervision not applied solely to the Work of the Change Order, home office salaries and expenses, and City of Los Angeles Business Tax. The following maximum markup percentages shall be applied to the total amount of direct expenditures of the Contractor and Subcontractors, as noted in the Change Order Cost Summary Form.

Changed/Extra Work – Direct Costs	Markup Percentage
Contractor Direct Labor	20%
Contractor Direct Materials, Equipment, Other Items	15%
Subcontractor (of any tier) Direct Labor	20%
Subcontractor (of any tier) Direct Materials, Equipment, Other Items	15%
Contractor Administrative Fee for Subcontractor's (of any tier) Direct Labor, Materials, Equipment, Other Items	5%

2. Bonds and Insurance

An additional allowance of one percent (1%) of all direct costs (less markup) is allowed.

3. Add/ Deduct Changes

The overhead rates determined above shall be applied to all additive Change Orders, except those utilizing as-bid Unit Prices or Stipulated prices listed in the Bid Proposal.

Any change in the Work involving both extras and credits shall show a net total cost, including subcontracts. Allowances for overhead and profit to the net total cost, as specified herein above, shall be applied if the net total cost is an extra; overhead and profit allowances shall not be applied if the net total cost is a credit. When the credit is due to a reduction in unit price quantity, the Contractor shall not be entitled to retain the markups in E.1 above for the reduced quantity. The estimated cost of deductions shall be based on labor and material prices on the date the Contract was signed.

F. City Furnished Materials, Equipment and Services

The Engineer reserves the right to furnish materials, equipment and services deemed expedient for use on the Change Order Work. The Contractor shall have no claim for profit or overhead on the cost of such materials, equipment and services.

G. Equipment Costs

The rates for rental or leased equipment shall not exceed the rates listed in the Rental Rate Blue Book (the Blue Book) published by Primedia Information, Inc., San Jose, California, as adjusted to the regional area of the Work under this Contract. For T&M Change Orders, the rates are established by the actual paid invoice(s) that comply with the requirements of Subsections G.1 and G.3. Owned equipment costs shall not exceed the rates established by Subsection G.2. The most recent published edition in effect at the commencement of actual equipment use on Change Order Work shall be used.

The rates paid for any rented or leased equipment or tools shall include the cost of fuel, oil, lubrication, supplies, small tools, necessary attachments, repairs and maintenance of any kind, depreciation, storage, insurance and all incidental costs associated with the operation of the equipment or tools.

It is the responsibility of the Contractor to include any appurtenances added to equipment which would increase the basic rate for said equipment (i.e., hoe-ram, oversize bucket, etc.) as established in the acceptable rental rate guide. All equipment and/ or tools shall be acceptable to the Inspector, in good working condition, suitable for the purpose for which it is to be used, and necessary to complete the Change Order Work. Payment will be based on the manner in which the equipment was actually powered, operated and modified per the equipment manufacturer’s recommendations.

1. Rented or Leased Equipment

For equipment rented or leased (including lease with purchase option) in arm's length transactions from outside vendors, the Contractor shall be paid the actual invoiced, rented or leased rates provided that the invoiced lease or rental rates do not exceed the rates set forth in the Blue Book. Arm's length rental or lease

transactions are those in which the firm involved in rental or lease of such equipment is not associated with, owned by, have common management, directorship, facilities, or stockholders with the firm renting the equipment. Submittal by a Contractor of a rental or leased invoice from the lessor will be prima facie proof of compliance with the above. However, such invoices are not conclusive proof; if questioned, the burden of proof remains with the Contractor. In no event shall the leased equipment rate billed to the City be at rates exceeding those prescribed in the following table:

Actual Usage (Change Order & Contract Work Combined)	Payment Category
Less than 8 hours	Hourly Rate
8 or more hours but less than 7 days	Daily Rate
7 or more days but less than 30 days	Weekly Rate
30 calendar days or more	Monthly Rate

a. When in Use:

Actual equipment use time documented by the Inspector shall be the basis that the equipment was utilized on the changed work and paid for under the T&M Change Order. In addition to the lease or rental rate, equipment-operating costs shall not exceed the estimated hourly operating rate as set forth in the Blue Book. The hours of operation shall be based upon actual equipment usage on the T&M Change Order Work as recorded by the Inspector. For multiple shift work sequences, the allowable equipment rate shall not exceed fifty percent (50%) of the base rate, for second or third shifts.

b. When Idle:

Idle equipment is equipment on site and necessary to perform the T&M Change Order Work, but periodically not in actual use due solely to the impact of the changed work. Equipment operating costs due to idle time, documented by the Inspector, shall be paid at the rate determined in “G” (1) above. The “ESTIMATED OPERATING COST $/HR” will not be paid when the equipment is idle. Idle time shall include a reasonable time allowance to and from the project site. Payment for equipment necessary to be on the site to complete the Work, but not in actual use due solely to the impact of the T&M Change Order Work, shall be paid per Caltrans Standard Specifications Section 8-1.07C, provided that its presence and necessity on the site has been documented by the Inspector, and further provided that the equipment was idled solely by actions of the City.

Payment for equipment or tools shall be limited to hours actually used on the T&M Change Order Work if the equipment or tool is already on site for Work under the original Contract. No “standby” time will be paid for equipment already on site for Work under the original Contract.

If equipment or tools are used intermittently and, when not in use, could be returned to the rental source at less expense than holding it at the work site, it shall be returned, unless the Contractor elects to keep it at the work site at no expense to the City.

2. Owned and Other Equipment

Equipment rates for owned equipment or equipment provided in other than arm's length transactions shall not exceed the total hourly costs as set forth in the Caltrans “Labor Surcharge and Equipment Rental Rates” effective at the time the T&M Change Order Work is performed. (The Caltrans equipment rental rates are available on the internet at http://www.dot.ca.gov/hq/construc/equipmnt.html.) If the equipment is not listed in Caltrans, then the Rental Rate Blue Book shall be used. When using the Blue Book, the hourly rate for any period less than 7 days shall be the weekly rate divided by 40, plus the Operating Cost. Except as noted herein below, this equipment hourly rate plus the estimated operating cost per hour from the Blue Book will be paid for each hour the equipment actually performs the T&M Change Order Work. Daily records listing the equipment units and their respective operators, identification code, and actual usage on the T&M Change Order Work, as certified at the end of each work day (or work shift if the Work is being performed in multiple work shift sequence) by the Inspector shall be the record upon which actual equipment use shall be based. For multiple shift work sequences, the Caltrans overtime factor shall be applied. When using the Blue Book, one-half the Non-Operating Cost will be deducted for second and third shifts. The Non-Operating Costs are the Blue Book monthly or weekly/40 rates, as applicable. It is agreed that this rate shall represent payment in full for all the Contractor’s and Subcontractor’s direct costs.

a. When Idle:

Payment for equipment necessary to be on the site to complete the Work, but not in actual use due solely to the impact of the changed work, shall be paid per Caltrans Standard Specifications Section 8-1.07C, provided that its presence and necessity on the site has been documented by the Inspector, and further provided that the equipment was idled solely by actions of the City. (When using the Blue Book the payment for idle time shall not exceed fifty percent (50%) of the Non-Operating Cost.) Idle equipment time will only be paid as a function of delays specifically directed or caused by the City's actions. In no event shall the idle time claimed in a day for a particular piece of equipment exceed the normal work schedule established for the project - usually eight (8) hours per day or forty (40) hours per week, and excluding Saturdays, Sundays, and holidays. For multiple shift work sequence, the allowable idle equipment rate shall not be allowed, for second or third shifts. It is agreed that this rate shall represent payment in full for all the Contractor’s and Subcontractor’s direct costs.

3. Equipment Haulage and Set-up Costs

Documented and actual equipment haulage and set-up costs shall be paid for, if applicable as set forth in Subsection B.3.

4. Other Equipment Cost Guides

In the event that a piece of equipment used on a Change Order is not listed in Caltrans or the Blue Book, costs may be derived from the Associated General Contractor’s of America Equipment Ownership Guide, the Associated Equipment Dealers Guide, or the Equipment Rate Guide published by the U.S. Army Corps of Engineers as adjusted appropriately for the type of work and use and the regional area of the Work under this Contract.

H. Records

At any time should the Contractor deviate substantially from the schedule, method and sequence of operation, equipment, cost or pricing data furnished by the Contractor and agreed to by the City in connection with the Change Order or should the City determine that any price negotiated in connection with the Change Order is defective due to such deviation or the fault of the Contractor, the City reserves the right to reduce the Change Order cost and reissue the Change Order at the amount in which the City determines to be the actual costs to complete the Change Order Work.

Whenever any material or process is indicated or specified by patent or a proprietary name, or by name of a manufacturer in the Change Order, such direction shall not relieve the Contractor's responsibility or obligation to perform Work in accordance with the Contract requirements. The Contractor shall be solely responsible for, and have control over construction means, methods, techniques, sequences and procedures, coordination of all portions of the Contract and Change Order Work.

The Contractor shall on a weekly basis submit an approximate accounting of the amount expended on the T&M Change Order Work to date and an estimate of the Impact to the time of performance of the Contract Work.

I. Partial Payments for Time and Materials Change Order Work.

Progress payments for T&M Change Order Work shall only be made if the anticipated cost of the changed work is in excess of $100,000 and/or the time to perform the changed work will exceed two (2) months duration. To receive payments for T&M Change Order Work, the Contractor shall submit to the Engineer an invoice of the daily reports which were verified by the Inspector, with details and documents, verifying the Contractor's and Subcontractor's actual costs incurred for the T&M Change Order Work as set forth in Subsections B through H. Costs shall be submitted within thirty (30) calendar days after the T&M Change Order Work has been satisfactorily completed unless an extension of time for submittal is authorized in writing by the Inspector.

J. Field Office Overhead - Rate Per Day:

Subject to the provisions of this Subsection and "Temporary Suspension or Delay of Work" of General Conditions, for each day of approved time extension due solely to extras, changes, and additions to the Work, Contractor shall be entitled to compensation for additional Daily Field Office Overhead as set forth herein. As a further condition to the Contractor's right to such additional compensation, the Contractor shall submit a detailed listing of the Daily Field Office Overhead cost components which are time related. The individual cost components shall represent costs which have been or will be incurred or increased as a sole or direct result of the time extension. This listing may include, but is not limited to, onsite project management, supervision, engineering, and clerical salaries; onsite office utilities and rent; onsite company vehicles and their operating expenses; site maintenance and security expenses. Daily Field Office Overhead costs which are unaffected by the increased time or time extension in the Change Order shall not be allowable costs of the Daily Field Office Overhead rates. These cost components include, but are not limited to, acquisition and installation of plant, stationary equipment, temporary construction facilities, utilities and office furnishings (unless such items are rented or leased); the preparation of the site including clearing, grubbing, grading, and fencing; and mobilization and demobilization expenses. The listing of the Daily Field Office Overhead cost components described above must be based on the Contractor's actual Field Office Overhead costs. This listing must be submitted with the first Change

Order proposal that includes a time extension request per Subsection D. If the Contractor's time related Daily Field Office Overhead cost changes for subsequent compensable delays, then the Contractor shall submit a new Daily Field Office Overhead rate based on the Contractor's time related Daily Field Office Overhead costs at the time of the subsequent delay. If change order work is performed during a compensable delay, any Daily Field Office Overhead costs paid by that change order shall be deducted from the compensation owed for additional Daily Field Office Overhead during the same time period.

The Daily Field Office Overhead rate shall be multiplied by the number of days the Contract is to be extended in the Change Order, and shall then be added to the agreed upon costs of the Change Order. No markup for overhead costs and no profit allowance shall be allowed on the Extended Daily Field Office Overhead cost component of the Change Order. The derivation of an extended home office overhead rate and its application to Contract time extensions shall not be allowed.

The information submitted above shall be submitted in sufficient detail to allow review, and shall be prepared in accordance with generally accepted accounting principles and applicable portions of the Federal Acquisition Regulations. The Engineer shall have the right to have an audit of the Contractor's costs performed, at the Contractor's sole expense, if the costs submitted are considered by the Engineer to be excessive, questionable, or unsupported. The overhead rates determined above shall be applied to all additive Change Orders, except those utilizing original as-bid unit prices under Subsection A.

(END OF SECTION)

SECTION 01255
PRICE REDUCTION FOR DEFECTIVE COST OR PRICING DATA

1.1 THE REQUIREMENT

A. If the ENGINEER determines that any price, including profit or fee, negotiated in connection with any Change Order under this Contract, or any cost reimbursable under this Contract, was increased because:

1. the CONTRACTOR furnished cost or pricing data which was not accurate, complete, and current as certified in the CONTRACTOR'S Certificate of Current Cost or Pricing Data;

2. a Subcontractor or prospective Subcontractor furnished cost or pricing data was submitted in support of a subcontract cost estimate furnished by the CONTRACTOR but which was not accurate, complete, and/or current as of the date certified in the CONTRACTOR'S Certificate of Current Cost or Pricing Data; or,

3. the CONTRACTOR or a Subcontractor or prospective Subcontractor, at any tier, furnished any data not within subsection 1.1A(1) or 1.1A(2),above, which was not accurate as submitted;

then the price shall be reduced accordingly, and the Contract shall be modified in writing as may be necessary to reflect such reduction. However, any reduction in the Contract price due to defective subcontract data of a perspective Subcontractor, when the subcontract was not subsequently awarded to such Subcontractor, will be limited to the amount (plus applicable overhead and profit allowances) by which the actual subcontract or actual cost to the CONTRACTOR if there was no subcontract, was less than the prospective subcontract cost estimate submitted by the CONTRACTOR; provided that the actual subcontract price was not affected by defective cost or pricing data.

(END OF SECTION)

SECTION 01270
MEASUREMENT OF QUANTITIES FOR UNIT PRICE WORK

1.1 THE REQUIREMENT

A. General

1. Unless otherwise specified, quantities of work shall be determined from measurements or dimensions in horizontal planes. However, linear quantities of pipe, piling, fencing and timber shall be considered as being the true length measured along longitudinal axis.

2. Unless otherwise provided in Specifications, volumetric quantities shall be the product of the mean area of vertical or horizontal sections and the intervening horizontal or vertical dimension. The planimeter shall be considered an instrument of precision adapted to measurement of all areas.

B. Methods of Measurement

1. Materials and items of Work which are to be paid for on basis of measurement shall be measured in accordance with methods stipulated in the particular sections involved.

C. Certified Weights

1. When payment is to be made on the basis of weight, the weighing shall be done on certified platform scales or, when approved by the ENGINEER, on a completely automated weighing and recording system. The CONTRACTOR shall furnish the ENGINEER with duplicate licensed weighmaster's certificates showing actual net weights. The CITY will accept the certificates as evidence of weights delivered.

D. Units of Measurement

1. Measurements shall be in accordance with Section 01420 – UNITS OF MEASURE of the GENERAL REQUIREMENTS. A metric ton or "tonne" is equal to 1,000 kilograms and the unit of liquid measure is a Liter (in U.S. Standard Measures, a pound is an avoirdupois pound; a ton is 2,000 pounds avoirdupois; and the unit of liquid measure is a gallon).

(END OF SECTION)

SECTION 01291
NOTICE TO WITHHOLD AND/OR STOP NOTICE

1.1 THE REQUIREMENT

A. When a "Notice to Withhold" or "Stop Notice" is served upon the CITY, or the Board, pursuant to the lien statutes of the State of California, to withhold sufficient funds from payments to the CONTRACTOR in support of a claim resulting from default by the CONTRACTOR in payment for labor or materials used in prosecution of the Contract, the CITY shall withhold from payment due the CONTRACTOR an amount of money equal to the amount of the claim stated in the "Notice to Withhold" or "Stop Notice," and an additional amount equal to twenty-five percent (25%) of the amount of said claim, to defray the costs of litigation in the event of court action on the claim, for a total withholding of one and one quarter (1-1/4) times the stated amount of the claim. At the discretion of the CITY, the CITY may allow the CONTRACTOR to file with the CITY the bond referred to in the Civil Code of the State of California after which said monies will not be withheld on account of such "Notice to Withhold" or "Stop Notice."

B. In the event the Contract is terminated for CONTRACTOR default, any funds due the CONTRACTOR and retained by the CITY in accordance with SECTION 01292 -PAYMENTS of these GENERAL REQUIREMENTS, shall become the property of the CITY to the extent necessary to repay to the CITY any excess in the Contract Price above the cost of the Work completed at the time of termination. After issuance of Notice To Discontinue Work, no further payments will be made to the CONTRACTOR for the Work covered by the notice until completion of work and final settlement has been made.

(END OF SECTION)

SECTION 01292
PAYMENTS

1.1 PAYMENT FOR MOBILIZATION

A. Payment for mobilization shall be limited to those items of work described in MOBILIZATION of these GENERAL REQUIREMENTS. Whether Mobilization is included as a Contract Bid Item in the Bid Proposal Form or specified as part of the lump sum in the Contract Documents, the amount shall include full compensation for furnishing the labor, materials, tools, equipment and incidentals for all of the Work involved in mobilization in advance of construction operations. The CONTRACTOR shall submit to the ENGINEER for approval the Contract Price Breakdown with the amount established for mobilization.

B. The CONTRACTOR shall submit to the INSPECTOR for approval a breakdown of the amount established for mobilization. Total payment (100%) for obtaining insurance and bonds will be made upon proof of payment for those items. The payment for all other items of mobilization will be made when those items of mobilization have been completed and as specified below:

1. When the monthly partial payment estimate of the amount earned, not including the amount earned for mobilization, is five percent (5%) or more of the original Contract amount, the total amount earned for mobilization may be up to fifty percent (50%) of the Contract item price for mobilization. This amount will be included in the said estimate for payment.

2. When the monthly partial payment estimate of the amount earned, not including the amount earned for mobilization, is ten percent (10%) or more of the original Contract amount, the total amount earned for mobilization may be up to seventy-five (75%) of the Contract item price for mobilization. This amount will be included in the said estimate for payment.

3. When the monthly partial payment estimate of the amount earned, not including the amount earned for mobilization, is twenty percent (20%) or more of the original Contract amount, the total amount earned for mobilization may be up to ninety-five percent (95%) of the Contract item price for mobilization. This amount will be included in the said estimate for payment.

4. When the monthly partial payment estimate of the amount earned, not including the amount earned for mobilization, is fifty percent (50%) or more of the original Contract amount, the total amount earned for mobilization may be up to one hundred percent (100%) of the Contract item price for mobilization. This amount will be included in the said estimate for payment.

C. The adjustment provisions in CHANGE ORDERS of these GENERAL REQUIREMENTS, and the retention of funds provisions in this Section, shall not apply to the Contract lump sum item for Mobilization.

D. When other Contract items are adjusted as provided in CHANGE ORDERS of these GENERAL REQUIREMENTS, if the costs applicable to such item of work

include mobilization costs, such mobilization costs will be deemed to have been recovered by the CONTRACTOR by the payments made for mobilization and will be excluded from consideration in determining compensation under said Article.

E. When the Contract does not include a Contract pay item for mobilization as specified above, full compensation for any necessary mobilization required shall be considered as included in the prices paid for the various Contract items of work involved and no additional compensation will be allowed.

1.2 PAYMENT FOR PERMITS

A. The Contractor shall obtain and pay for all permits necessary for performance of the Work in accordance with the provisions of PERMITS AND CONSTRUCTION EASEMENTS of the GENERAL CONDITIONS. If the Bid Proposal provides an allowance for Permits, the CONTRACTOR shall include in the Bid the amount stipulated under PERMITS in the SCHEDULE OF WORK AND PRICES in the Bid Proposal as an allowance for the costs of all required permits. Costs shall be limited to the actual fees paid to the agencies and will be reimbursed based on original receipts only and no overhead or profit shall be added to the cost of the permits. The CONTRACTOR shall deliver to the ENGINEER with each permit the original receipt. After all permits have been obtained and delivered, the actual costs of all permits shall be reviewed by the CONTRACTOR and the ENGINEER. If the total costs differ from the amount set forth in the SCHEDULE OF WORK AND PRICES, the Contract Price shall be adjusted by a Change Order for the difference between the total actual costs and the amount included in the Bid, as an additional amount due the CONTRACTOR or a credit to the CITY, as appropriate.

1.3 MONTHLY PROGRESS PAYMENTS

A. General

1. The quantities listed in the Bid schedule will not govern final payment. Payment to the CONTRACTOR will be made only for actual quantities of Contract items constructed in accordance with the Plans and Specifications. Upon completion of construction, if the actual quantities show either an increase or decrease from the quantities given in the Bid schedule, the Contract Unit Prices will prevail subject to the provisions of CHANGE ORDERS of these GENERAL REQUIREMENTS.

2. The unit and/or lump sum prices to be paid shall be full compensation for the items of work and all appurtenant work, including furnishing all materials, labor, equipment, tools, and incidentals.

3. Payment will not be made for materials wasted or disposed of in a manner not called for under the Contract. This includes rejected material not unloaded from vehicles, material rejected after it has been placed, and material placed outside of the Plan lines. No compensation will be allowed for disposing of rejected or excess material.

4. Payment for work performed or materials furnished under an Assessment Act Contract will be made as provided in particular proceedings or legislative act under which such Contract was awarded.

5. Whenever any portion of the Work is performed by the CITY at the CONTRACTOR'S request, the cost thereof shall be charged against the CONTRACTOR, and may be deducted from any amount due or becoming due from the CITY.

6. Whenever immediate action is required to prevent injury, death, or property damage, and precautions which are the CONTRACTOR'S responsibility have not been taken and are not reasonably expected to be taken, the CITY may, after reasonable attempt to notify the CONTRACTOR, cause such precautions to be taken and shall charge the cost thereof against the CONTRACTOR, or may deduct such cost from any amount due or becoming due from the CITY. CITY action or inaction under such circumstances shall not be construed as relieving the CONTRACTOR or its Surety from liability.

7. Guarantee periods shall not be affected by any payment, but shall commence on the date equipment or material is placed into service at the direction of the CITY. In the event such items are not placed into service, prior to partial or final completion of the project, the guarantee period will commence on the date of completion.

8. If the Contract comprises two or more major units of work readily separable and divisible, and for which separate prices are stipulated in the Contract, the CONTRACTOR may make separate requests for progress payment on each such unit, and the CITY will make such progress payments, statement of completion, acceptance, retention, and final payment in accordance with the procedure specified above for the entire Contract.

9. The making of any payment to the CONTRACTOR under this Contract shall not relieve the CONTRACTOR of any obligations hereunder. The CONTRACTOR is obligated to complete the Contract in its entirety and to deliver to the CITY such acceptably completed work, finished product or structure as is specified in the Contract, at the time or times specified. Until this Contract is fully performed by the CONTRACTOR, and the Work, product, or structure produced thereby is accepted by the CITY, the CONTRACTOR shall also be obligated to repair, replace, restore, or rebuild any fully or partially completed work or structure, or any materials or equipment required to be provided under the Contract which may be damaged, lost, stolen, or otherwise injured in any way. This particular obligation of the CONTRACTOR, with respect to any major unit of the type mentioned in this Section, will terminate upon the completion by the CONTRACTOR and acceptance by the CITY of such major unit.

B. Monthly Request for Payment

1. Unless otherwise prescribed by law, three (3) working days prior to the last work day of each month, or other such date mutually agreed upon by the CONTRACTOR and the INSPECTOR, the CONTRACTOR shall prepare and submit to the INSPECTOR, an estimate of the cumulative amount and value of acceptable Work performed by the CONTRACTOR at the Jobsite up to that date. The value of the completed Work shall be based on the approved Schedule of Values in accordance with the provisions of SCHEDULE OF VALUES/CONTRACT PRICE BREAKDOWN of these GENERAL REQUIREMENTS. Said amount

shall also include the value of all acceptable materials and equipment for the Contract that have been delivered and suitably stored but not yet used in the Work, subject to the requirements of this Section.

2. The CONTRACTOR will be required to make all monthly requests for payment on the CITY'S Contract Payment Request Form. CONTRACTOR shall submit Contract Payment Request Form with the approved Payment Request estimate of work to the INSPECTOR. That form requires that the CONTRACTOR certify, under penalty of perjury, to the following:

   a. No workers were required or permitted to work more than eight (8) hours in any one calendar day, except in cases of emergency, and except as provided by law.

   b. Not less than the prevailing rates of wages, as set forth in the Contract for this Work, have been paid all laborers, workers, and mechanics employed to perform this Work.

   c. There were no substitutions of Subcontractors, no assignment or transferences of Subcontractors or Sub-Subcontractors, except as approved by the Board of Public Works.

   d. All of the provisions of Los Angeles Administrative Code, Section 10.8, pertaining to non-discrimination in employment have been complied with.

C. Payments for undelivered equipment, specifically manufactured equipment to be incorporated into the Work, excluding "off the shelf" or catalog items, will be made when all of the following conditions exist:

   1. The equipment must be specifically designated in the Technical Specifications for partial payment prior to delivery,

   2. The equipment to be specifically manufactured for the Project could neither be readily utilized on, nor diverted to, another job; and,

   3. A fabrication period of more than six (6) months is anticipated.

D. On lump-sum Contracts the INSPECTOR'S estimate of the monthly payment due the CONTRACTOR is an estimate of work acceptably completed and will not be required to be made by strict measurement.

E. Upon verification and approval by the INSPECTOR, the progress payment estimate shall be forwarded to the Payment Section of the Bureau of Contract Administration for processing.

F. Payment to the CONTRACTOR shall be made within 30 days after an undisputed and properly submitted payment request is received from the CONTRACTOR by the Bureau of Contract Administration Payment Section.

G. The CITY shall retain a portion of the amount otherwise due to the CONTRACTOR, as follows:

1. Retention of five percent (5%) will be held on the original Contract value on each approved payment claim until the amount paid of the original Contract equals fifty percent (50%). The INSPECTOR may then, at its sole discretion, discontinue further retention on the original Contract value for all subsequently approved payment claims.

2. At any time during the course of the Contract, the INSPECTOR may, at its sole discretion, reinstate the five percent (5%) retention.

3. In the event the Contract is terminated for CONTRACTOR default, any funds due the CONTRACTOR and retained by the CITY in accordance with these provisions, shall become the property of the CITY to the extent necessary to repay to the CITY any excess in the Contract Price above the cost of the Work completed at the time of termination. After issuance of Notice To Discontinue Work, no further payments will be made to the CONTRACTOR for the Work covered by the notice until completion of work and final settlement has been made.

H. Additional deductions will be made from each monthly payment request for amounts due the CITY as follows:

1. Equipment or materials furnished by the CITY.

2. Services rendered to the CONTRACTOR by the CITY.

3. Amounts due the CITY for liquidated damages under the terms of the Contract.

4. Amounts required to be deducted by federal, state, or local governmental authority or other provisions of these Contract Documents.

I. From the balance thus determined will be deducted the amount of all previous payments, and the remainder shall constitute the monthly payment due the CONTRACTOR.

J. The monthly payments may be withheld or reduced, for the following reasons:

1. If the CONTRACTOR is not diligently or efficiently complying with the express intent of the Contract;

2. If there are unresolved Notices of Non-Compliance;

3. If Technical Manuals are not submitted;

4. If Record Drawings are not kept up-to-date;

5. If progress photographs are not submitted;

6. If construction schedules are not submitted in accordance with these General Requirements; or

7. If the Solid Waste Diversion and Disposal Report is not submitted with progress payment estimate.

8. Failure of the CONTRACTOR to maintain insurance as required by the CONTRACT.

9. Upon written request of the ENGINEER.

K. The CONTRACTOR shall promptly submit the following in response to requests by the INSPECTOR:

1. All information and records necessary to determine the cost of the Work for purposes of estimating monthly payment.

2. All itemized statements, in a form satisfactory to the INSPECTOR, of the actual cost of all acceptable materials delivered by the CONTRACTOR to the site.

L. The making of any payment to the CONTRACTOR shall not relieve the CONTRACTOR from Contractual obligations. These payments shall not be construed as the transfer of ownership of any equipment or materials to the CITY.

M. Responsibility of ownership shall remain with the CONTRACTOR who shall be obligated to store, protect, repair, replace, rebuild or otherwise restore any fully or partially completed work or structure for which payment has been made. The CONTRACTOR shall replace any materials or equipment required to be provided under the Contract which may be damaged, lost, stolen, or otherwise degraded in any way prior to acceptance of the Work under the Contract.

N. Escrow Account for Retention Payments

1. Under Section 22300 of the Public Contract Code, the CONTRACTOR has the option to deposit securities with an Escrow Agent as a substitute for the CITY withholding the required five percent (5%) retention from progress payments to ensure performance of any contract entered into between the CITY and the CONTRACTOR. Provided adequate value of securities is on deposit with the Escrow Agent, retention payments are then made directly to the CONTRACTOR by the CITY. As an option, Section 22300 also permits the CONTRACTOR to have retention payments made directly to the Escrow Agent, with no requirement for the CONTRACTOR to deposit securities with the Escrow Agent. If the CONTRACTOR requests neither of the above alternatives, the retention funds will be retained by the CITY and invested by the City Treasurer, in which case, interest earned will accrue to the benefit of the CITY.

2. Under the terms of the Escrow agreement, the CONTRACTOR has the option to arrange to deposit securities up front for up to the full five percent (5%) of the total amount of the Contract **(Option "A")**, or to have the CITY make payments directly to the Escrow Agent for the amount the CITY withholds for the required retentions with no requirement for the CONTRACTOR to deposit securities in advance **(Option "B")**. These arrangements are set forth in the Escrow Agreement.

3. At the CONTRACTOR'S request, the Bureau of Accounting will provide the necessary paperwork to establish the Escrow Account. For information contact:

City of Los Angeles
Office of Accounting
200 N. Spring Street
9th Floor, City Hall
Los Angeles, CA 90012
(213) 978-0994

1.6 FINAL PAYMENT

A. Final Payment of all monies owed the CONTRACTOR shall be made within 60 days of the date of Final Field Acceptance by the Final Inspector after deducting all prior payments and all amounts to be withheld under the provisions of the Contract, including the following items:

1. Liquidated damages, as applicable;

2. "Disputed Funds" including, but not limited to, the following:

a. Penalty and/or restitution for failure of the CONTRACTOR to pay prevailing wages as required by the contract.

b. Penalty for failure of the CONTRACTOR to receive approval of all Subcontractor(s) prior to said Subcontractor working on the project.

c. Penalty for failure of the contractor to receive approval for Subcontractor substitution(s).

d. Penalty for failure of the contractor to receive approval for a reduction in the dollar amount paid a bid-listed and/or approved Subcontractor;

3. Lien claims or Stop Notices filed on behalf of suppliers, Subcontractors, and labor performed in connection with the project; except, that upon submittal of a Stop Notice Release Bond issued by an approved Surety Company executed in favor of the CONTRACTOR, the CITY will release such portion of the retained funds to said CONTRACTOR that is being held solely to cover Stop Notice Claims.

B. No claim of the CONTRACTOR under this Article shall be allowed unless the CONTRACTOR has given the required written notice. Nor shall a claim by the CONTRACTOR for an equitable adjustment hereunder be allowed if asserted after final payment under this Contract.

C. The acceptance by the CONTRACTOR of final payment and retention shall release the CITY, its officers, agents, representatives or employees, as representatives of the CITY, from all claims and all liability to the CONTRACTOR for all matter in connection with the Work and all acts of the CITY relating to or arising out of the Work.

(END OF SECTION)

SECTION 01298
SCHEDULE OF VALUES / CONTRACT PRICE BREAKDOWN

1.1 THE REQUIREMENT

A. The Schedule of Values shall be used as a basis for determining progress payments on a lump sum contract or any designated lump sum bid item. The Schedule of Values shall be a schedule of cost loaded construction activities equal, in total, to the lump sum bid and shall be in such form and sufficient detail to correctly represent a reasonable apportionment of the lump sum. Prior to submitting an invoice for payment, the CONTRACTOR shall have submitted a detailed Schedule of Values and obtained approval from the INSPECTOR.

B. Each lump sum bid item on the Schedule of Work and Prices, as set forth in the Bid must be broken down separately. The breakdown of each lump sum bid item must cover the cost of construction required by the Drawings and Project Manual for that item. The sum of the values for the construction activities, within a bid item, must equal the total bid amount for that item. The breakdown shall include subcontract amounts which shall not deviate from the amounts submitted in the Bid Proposal. The CONTRACTOR shall provide certification from the Subcontractors certifying the subcontract amounts.

C. Each activity in the Schedule of Values shall delineate one construction activity. For example, the placement of concrete between construction joints, the construction of an electrical duct bank or pipeline between points A & B. The costing for each activity should include all costs for the labor and materials or equipment required to complete the activity. For example, concrete construction activities should include all costs for the forming, placing of reinforcement, placing concrete and curing. The cost for pipeline construction activities should include materials, equipment and installation including pipeline supports or thrust blocks. The excavation and backfill for a pipeline or structure may be separate activities. The Contract Price breakdown shall include the itemized costs for the plant establishment and any maintenance services to be performed before the final project acceptance is made. No non-construction activity shall be cost loaded.

D. The CONTRACTOR shall use cost loaded construction activities from the Construction Schedule as a Schedule of Values. Each construction activity shall be encoded to its bid item and a sort provided for each bid item totaling the cost loaded amount. The total of the Cost Loaded amounts for each bid item shall equal the amount bid for that item. The total of the Schedule of Values shall equal the current Contract value at all times. At any time during the progress of the Work of the Contract the INSPECTOR reserves the right to review the cost loading of the Schedules of Values and direct necessary revisions. When requested by the INSPECTOR, the CONTRACTOR shall provide all information necessary to substantiate the cost loading.

(END OF SECTION)

SECTION 01313
WORK BY CITY OR OTHERS

1.1 THE REQUIREMENT

A. The CONTRACTOR shall be responsible for ascertaining the nature and extent of any simultaneous, collateral and essential work by others. The CITY, its employees and contractors, and others, shall have the right to operate within or adjacent to the worksite to perform such work.

B. The CITY, the CONTRACTOR, their employees, Subcontractors and others, shall coordinate their operations and cooperate to hold interference to a minimum.

C. The CONTRACTOR shall include in its Bid and schedule all costs and time involved as a result of coordinating its work with others. The CONTRACTOR shall not be entitled to additional compensation from the CITY for damages resulting from such simultaneous, collateral and essential work. The CONTRACTOR'S coordinating efforts shall include redeployment of his work forces to other parts of the Work.

D. Should the CONTRACTOR be delayed by the CITY, and such delay could not reasonably have been foreseen and prevented by the CONTRACTOR, the ENGINEER will determine the extent of the delay, the effect of the delay on the project as a whole and any commensurate extension of time.

E. The CONTRACTOR is required to notify affected CITY offices of Work to be done as specified in the following table:

Item	Office of LADOT to be notified	Cost to be borne by	Required Notice (working days)
Work on signal – controlled intersection	Traffic Signal Inspector: Central Area: (213) 485-1071 Western Area: (213) 485-6834 Valley Area: (818) 779-9433 ATSAC Project Engineer: (213) 972-8664	Contractor	3
Traffic Signal and Interconnect damage	Signal Superintendent: Daytime: (213) 473-8465 After Hours: (818) 374-4823		Immediate
Parking meter damage	Parking Meter Supervisor: (213) 473-0644		
Parking meter removal and replacement	Parking Meter Planning Supervisor: (213) 473-0644	City**	5
Material and labor by LADOT	For Scheduling of: Sign/Striping: (213) 485-9331 Signal: (213) 485-6818		
Traffic Sign removal, relocation and replacement	Appropriate District Transportation Engineer*: Central District: (213) 972-4990		
Parking restrictions, changes relating to temporary striping			10
Final traffic striping and pavement marking	East Valley District: (818) 374-4688	Contractor	5
Temporary Traffic Control Plan	Hollywood District: (323) 957-6843		30
Temporary striping installation mark out	West Valley District: (818) 774-4306		2
Offsite Detour Signs	Western District (310) 575-8138 Southern District: (310) 732-4599		5
Placement of temporary “No Parking” signs	Special Traffic Control Section: (213) 485-2298		4

* For B-Permit projects, notify citywide investigations (213) 972-8687.
**On B-Permit projects, the costs shall be charged to the permittee as required by Section 62.110 of the Los Angeles Municipal Code.

(END OF SECTION)

SECTION 01321
CONTRACTOR'S CONSTRUCTION SCHEDULE AND REPORTS

1. THE REQUIREMENT

A. General

1. After Notice of Award and before the start of any Work, the CONTRACTOR shall submit its proposed Construction Baseline Schedule (the Schedule) to the ENGINEER and INSPECTOR. The Schedule, and any changes to it, is subject to approval by the INSPECTOR. Submittal and approval of the Schedule is a condition precedent to the issuance of any payments under this Contract. The Schedule shall be in the form of a tabulation, chart, or graph and shall be in sufficient detail to show the chronological relationship of all activities of the project. The Schedule shall indicate either graphically or in report form the logic constraints between the schedule activities. These include, but are not limited to: estimated start and completion dates of various activities, submittal of Shop Drawings to the ENGINEER for approval, procurement of materials and scheduling of equipment deliveries. The Schedule shall cover the time from Notice to Proceed to the INSPECTOR'S issuance of a Statement of Completion. The Schedule shall recognize the requirements of the GENERAL REQUIREMENTS Section 01711 – SITE INVESTIGATION, and reflect completion of all Work under the Contract within the specified time and in accordance with the Specifications.

   The INSPECTOR may require a written statement of agreement with the Schedule from any subcontractor listed for more than 10% of the contract value.

2. Unless otherwise provided, the Contract time shall commence upon the date of issuance of a Notice To Proceed. The Work shall start within fifteen (15) calendar days thereafter, and be diligently prosecuted to completion within the time provided in the Specifications. The project shall be deemed complete upon Final Field Acceptance by the INSPECTOR.

3. If the CONTRACTOR desires to make a major change in the method of operations after commencing construction, or if the schedule fails to reflect the actual progress, the CONTRACTOR shall submit to the ENGINEER and INSPECTOR a revised Schedule in advance of beginning revised operations.

4. The ENGINEER may waive these requirements for Work constructed under permit.

B. Time of Completion

1. The CONTRACTOR shall complete the Work within the time set forth in the Contract. The CONTRACTOR shall complete each portion of the Work within such time as set forth in the Contract for such portion. Unless otherwise specified, the time of completion on the Contract shall be expressed in working days.

2. Working Day

A working day (work day / workday) shall be as defined in DEFINITIONS of the GENERAL CONDITIONS.

3. Contract Time Accounting

The INSPECTOR will make a daily determination of each workday to be charged against the Contract time. These determinations will be discussed and the CONTRACTOR will be furnished a periodic statement showing allowable number of workdays of Contract time, as adjusted, at the beginning of the reporting period. The statement will also indicate the number of workdays charged during the reporting period and the number of workdays of Contract time remaining. If the CONTRACTOR does not agree with the statement, it shall file a written protest within fifteen (15) calendar days after receipt, setting forth the facts of the protest. Otherwise, the statement will be deemed to have been accepted.

(END OF SECTION)

SECTION 01322
CONSTRUCTION PROGRESS PHOTOGRAPHY

PART ONE - GENERAL

1.1 SUMMARY

A. Required**:** Provide photographs taken at the Jobsite at the specified stages of Contracted Work in accordance with provisions of this Section.

1. Take three views of each major improvement or other feature as directed by the ENGINEER at thirty (30) day intervals during the period of Contracted Work.

2. Take first photographs just before CONTRACTOR starts any work operations at the Jobsite.

3. Take final photographs when all Contracted Work has been completed, regardless of time interval since previous photographs were taken. These photographs shall be suitable for use in City presentations and publications.

B. Related Work:

1. Documents affecting work of this Section include, but are not necessarily limited to, GENERAL CONDITIONS, DIVISION 1 - GENERAL REQUIREMENTS and other Sections of the Project Manual.

1.2 SUBMITTALS

A. Comply with pertinent provisions of Section 01330 **–** SHOP DRAWINGS / SUBMITTALS of the GENERAL REQUIREMENTS.

B. Except as otherwise directed by the ENGINEER, submit three color prints of each view.

1.3 QUALITY ASSURANCE

A. Secure the services of a full-time professional photographer who is skilled and experienced in construction photography and whose work samples are acceptable to the ENGINEER.

B. Do not replace the photographer without the ENGINEER'S written approval.

C. Do not permit prints to be issued for any other purpose without specific written approval from the ENGINEER.

D. Photographs and prints to be of professional quality; clear, in focus, with high resolution and sharpness, and with minimum distortion. Prints to be with contrast, detail and finish for acceptable reproduction by half-tone cut.

PART TWO - PRODUCTS

2.1 CONSTRUCTION PHOTOGRAPHS

A. Provide Color Prints and digital files:

1. Size: 8" x 10"

2. Type: Smooth surface, glossy print, single weight paper with white base mounted on muslin or on double weight glossy paper.

B. On the front or back of each print, in a manner not damaging to the print, identify the following:

1. Job name and address;

2. Location from which photographed;

3. Date of photograph;

4. Photographer's name and address, and the photograph number.

PART THREE - EXECUTION

3.1 CONSTRUCTION PHOTOGRAPHY

A. View Locations: As directed by the ENGINEER**.** Location(s) to provide diversified overall view of the Work from a position that is expected to remain accessible throughout progress of the Contracted Work for added photography.

Continue to take photographs at same view position of the Works to show continuous progress of the Works until the Works are completed or as directed by the ENGINEER**.**

B. Notifications: Notify the ENGINEER seven (7) days in advance of proposed day of photography.

C. Weather Conditions: When inclement weather is anticipated, consult with the ENGINEER to determine acceptable alternate arrangements.

D. Timing of Photography: To the maximum extent practicable, take photographs at the same time of day throughout progress of the Contracted Work. Timing shall be approved by the ENGINEER**.**

E. On Contract Drawing: Photographer to identify each photograph location or by such other means as acceptable to the ENGINEER, to enable future photographs to be taken from the same location and position.

F. Change of Locations: When so directed by the ENGINEER because of construction, change one or more of the locations inside or outside of the building(s).

(END OF SECTION)

SECTION 01330
SHOP DRAWINGS / SUBMITTALS

1.1 THE REQUIREMENT

A. General

1. Shop Drawings and submittals shall be provided, at the CONTRACTOR'S expense, when required by the Plans of Specifications, or requested by the ENGINEER.

2. Materials shall not be furnished or fabricated, nor any Work done for which Shop Drawings or submittals are required, before those Shop Drawings or submittals have been reviewed, as provided in this Section. Neither review nor approval of Shop Drawings or submittals by the ENGINEER shall relieve the CONTRACTORS from responsibility for errors, omissions, or deviations from the Contract Documents, unless such deviations were specifically called to the attention of the ENGINEER in the letter of transmittal. The CONTRACTOR shall be responsible for the correctness of the submittals and Shop Drawings, including shop fits, field connections, and results obtained by use of such drawings.

3. The CONTRACTOR shall allow a minimum of thirty (30) working days for each review of Shop Drawings and submittals for temporary bridges. For all other Shop Drawings and submittals, the CONTRACTOR shall allow a minimum of twenty (20) working days for each review, unless otherwise mutually agreed to by the CONTRACTOR and the ENGINEER. Review periods are not cumulative. The aforementioned time frames begin anew upon each submission of Shop Drawings and/or submittal whether it is the initial submission or a resubmission after review by the ENGINEER. Each set of Shop Drawings or submittals shall be accompanied by a letter of transmittal describing exactly what is being transmitted.

B. Shop Drawings

1. Shop Drawings shall be prepared in accordance with current modern engineering practice and shall be of a size and scale to clearly show all necessary details.

2. Each Shop Drawing shall be a good quality transparency, accompanied by six (6) prints. If no change or correction is required, three (3) prints will be returned to the CONTRACTOR. If extensive additions or corrections are required, the ENGINEER will return one (1) marked-up print along with the transparency, for corrections and resubmission. Final transparencies will be retained by the CITY.

3. Layout diagrams or schedules are required for pipelines utilizing pipe materials conforming to the indicated subsections. The diagrams or schedules shall be submitted for reference only, except curve layouts are required for approval.

4. The diagram shall be of a size and scale to show clearly all necessary details. Pipeline layouts, for reference only, may be submitted in tabulated form in increasing order of alignment stationing.

5. Shop Drawings are required in the following subsections:

Item	Section Number	Title	Subject
1	01573	Excavation Shoring, Forms, and Falsework	Trench Shoring
2	207-2.5	Joints	Reinforced Concrete Pipe
3	207-8.4	Joints	Vitrified Clay Pipe
4	207-10.2.1	General	Fabricated Steel Pipe
5	300-3.2	Cofferdams	Structure Excavation & Backfill
6	303-1.6.1	General	Falsework
7	303-1.7.1	General	Placing Reinforcement
8	303-3.1	General	Prestressed Concrete Construction
9	304-1.1.1	Shop Drawings	Structural Steel
10	304-1.1.2	Falsework Plans	Structural Steel
11	304-2.1	General	Metal Hand Railings
12	306-2.1	General	Jacking Operations
13	306-3.1	General	Tunneling Operations
14	306-3.4	Tunnel Supports	Tunneling Operations
15	306-6	Remodeling Existing Sewer Facilities	Polyethylene Liner Installation
16	306-8	Microtunneling	Microtunneling Operations
17	306-4.3	Controller Cabinet Wiring Diagrams	Traffic Signal Construction
18	306-1.2.2	Pipe Laying	Pipeline Shop Drawings

6. Shop Drawings listed above as Items, 5, 6, 8, 9, 10, 12, 13, 14 and 16 shall be prepared by a Civil or Structural Engineer registered by the State of California.

C. Submittals

1. Submittals shall consist of the appropriate combination of catalog sheets, material lists, manufacturer's brochures, technical bulletins, specifications, diagrams, or product samples, necessary to describe a system, product, or items. Submittals for systems shall be bound together and include all manufactured items for the system. Six (6) copies of each submittal shall be transmitted to the ENGINEER. If no change or corrections is required, three (3) copies will be returned to the CONTRACTOR.
2. Submittals are required for irrigation systems, street lighting systems, and traffic signals, and may be required for any product, manufactured item, or system.

(END OF SECTION)

SECTION 01350
AUDIT AND ACCESS TO RECORDS

1.1 THE REQUIREMENT

A. The CONTRACTOR shall maintain books, records, estimates, communications, payroll documents and other evidence directly pertinent to performance of Work under this Contract in accordance with generally accepted accounting principles and practices consistently applied for a period of no less than four (4) years from the date of the Project acceptance by the Board of Public Works. The CONTRACTOR shall also maintain the financial information and data used by the CONTRACTOR in the preparation or support of any cost submissions required for this Contract, or any Modifications or claims, and a copy of the cost summary submitted to the CITY. The CITY authorized representatives shall have access, at all times during normal business hours, to such books, records, documents and other evidence for the purpose of inspection, audit and copying. The CONTRACTOR will provide proper facilities for such access and inspection.

B. The CONTRACTOR agrees to make A through G of this Article applicable to this Contract and all Modifications or claims affecting the Contract price. The CONTRACTOR agrees to include A through G of this Article in all his contracts and all tier subcontracts in excess of $10,000, and to make A through G of this Article applicable to all Modifications and claims related to project performance.

C. Audits conducted under this Article shall be in accordance with generally accepted auditing standards and established procedures and guidelines of the reviewing or audit agency.

D. The CONTRACTOR agrees to the disclosure of all information and reports resulting from access to records under A and B of this Article, to the CITY and affected agencies.

E. Records under A and B of this Article shall be maintained and made available during performance of Work under this Contract within the time period specified in A of the Article. In addition, those records which relate to any portion of this Contract, to any Modification, to any dispute, to litigation, to the settlement of claims arising out of such performance, or to costs or items to which an audit exception has been taken, shall be maintained and made available within the time period specified in A of the Article.

F. This right of access Article applies to financial records pertaining to this Contract and all Contract Modifications. In addition, this right of access applies to all records pertaining to all contracts, contract modifications, and contract amendments:

1. To the extent the records pertain directly to Contract performance;

2. If there is any indication that fraud, gross abuse or corrupt practices may be involved; or

3. If the Contract is terminated for default or for convenience.

G. Access to records is not limited to the required retention periods. The authorized representatives designated in A of this Article shall have access to records at any reasonable time for as long as the records are maintained.

H. Provided that CITY has made demand for access or audit, pursuant to this Section, CONTRACTOR'S compliance with provisions A through G of this Section shall be a condition precedent to maintenance of any legal action or proceeding by the CONTRACTOR against the CITY and to CONTRACTOR'S right to Progress or Final Payment. Without limitation to the foregoing, or to any other provisions for withholding set forth in the Contract Documents, CITY shall have the right, in its sole discretion and in addition to any right of withholding of retention, to further withhold from any payment to CONTRACTOR a sum of up to ten percent (10%) of the total amount set forth in CONTRACTOR'S current, unpaid Application(s) for Payment, until CONTRACTOR has complied with any outstanding and unsatisfied request by CITY for audits under this Section. Upon CONTRACTOR'S compliance with this Section, any monies withheld pursuant to this Paragraph solely due to CONTRACTOR'S failure to permit an audit requested by CITY shall be released to CONTRACTOR.

I. CONTRACTOR hereby consents and agrees that any failure by CONTRACTOR to provide access to records as provided in A through G of this Section shall be specifically enforceable by issuance of a preliminary and/or permanent mandatory injunction by a court of competent jurisdiction based on affidavits submitted to such court, without the necessity of oral testimony, to compel CONTRACTOR to permit access and inspection of the records or to require delivery of the records to CITY for inspection.

(END OF SECTION)

SECTION 01411
CONFINED SPACE ENTRY

1.1 THE REQUIREMENT

A. Confined Space Entry Program

1. The CONTRACTOR shall be responsible for implementing, administering, and maintaining a confined space entry program (CSEP) in accordance with Sections 5156, 5157 and 5158, Title 8, CCR.

2. Prior to starting the Work, the CONTRACTOR shall prepare and submit its comprehensive CSEP to the ENGINEER. The CSEP shall address all potential physical and environmental hazards and contain procedure for safe entry into confined spaces, including, but not limited to, the following:

a. Training of personnel

b. Purging and cleaning the space of materials and residue

c. Potential isolation and control of energy and material inflow

d. Controlled access to the space

e. Atmospheric testing of the space

f. Ventilation of the space

g. Special hazards consideration

h. Personal protective equipment

i. Rescue plan provisions.

3. The CONTRACTOR'S submittal shall include the names of its personnel, including Subcontractor personnel, assigned to the project, who will have CSEP responsibilities, their CSEP training, and their specific assignment and responsibility in carrying out the CSEP.

B. Permit-Required Confined Spaces

1. Entry into permit-required confined spaces, as defined in Section 5157, Title 8, CCR, may be required as a part of the Work. All maintenance holes, tanks, vaults, pipelines, excavations, or other enclosed or partially enclosed spaces shall be considered permit-required confined spaces until the pre-entry procedures demonstrate otherwise. The CONTRACTOR shall implement a permit space program prior to performing any Work in a permit-required confined space. A copy of the permit shall be available at all times for review by CONTRACTOR and CITY personnel at the Worksite.

C. Payment

1. Payment for implementing, administering, and providing all equipment and personnel to perform the CSEP shall be included in the bid items for which the CSEP is required.

(END OF SECTION)

SECTION 01420
UNITS OF MEASURE

1.1 THE REQUIREMENT

A. General

1. The International System of Units, also referred to as SI or the metric system, is the principal measurement system in these specifications and shall be used for construction, unless otherwise stated in the Contract documents. U.S. Standard Measures, also called U.S. Customary System, are included in parenthesis. SI units and U.S. Standard Measures in parenthesis may or may not be exactly equivalent. If U.S. Standard Measures are specified for use in the contract documents, then all values used for construction shall be U.S. Standard Measures shown in parenthesis. However, certain material specifications and test requirements contained herein use SI units specifically and conversions to U.S. Standard Measure have not been included in these circumstances. When U.S. Standard Measures are not included in parenthesis, then the SI units shall control.

2. Reference is also made to ASTM E 380 for definitions of various units of the SI system and a more extensive set of conversion factors.

B. Units of Measure and Their Abbreviations (abbreviations noted within parentheses):

U.S. Customary Unit (Abbreviations)	Equal to	SI Unit (Abbreviations)
1 mil (= 0.001 in)	=	25.4 micrometer (µm)
1 inch (in)	=	25.4 millimeter (mm)
1 inch (in)	=	2.54 centimeter (cm)
1 foot (ft)	=	0.3048 meter (m)
1 yard (yd)	=	0.9144 meter (m)
1 mile (mi)	=	1.6093 kilometer (km)
1 square foot (ft^2)	=	0.0929 square meter (m^2)
1 square yard (yd^2)	=	0.8361 square meter (m^2)
1 cubic foot (ft^3)	=	0.0283 cubic meter (m^3)
1 cubic yard (yd^3)	=	0.7646 cubic meter (m^3)
1 acre	=	0.4047 hectare (ha)
1 U.S. gallon (gal)	=	3.7854 Liter (L)
1 fluid ounce (fl. oz.)	=	29.5735 milliliter (mL)
1 pound mass (lb) (avoirdupois)	=	0.4536 kilogram (kg)
1 ounce mass (oz)	=	0.0283495 kilogram (kg)
1 Ton (= 2,000 lb avoirdupois)	=	0.9072 Tonne (= 1,000 kg)
1 Poise	=	0.1 pascal · second (Pa · s)
1 centistoke (cs)	=	1 square millimeters per second (mm^2/s)
1 pound force (lbf)	=	4.4482 Newton (N)
1 pound per square inch (psi)	=	6.8948 Kilopascal (kPa)
1 pound force per foot (lbf/ft)	=	1.4594 Newton per meter (N/m)
1 foot-pound force (ft-lbf)	=	1.3558 Joules (J)
1 foot-pound force per second ([ft-lbf]/s)	=	1.3558 Watt (W)
1 part per million (ppm)	=	1 milligram/liter (mg/L)

C. Temperature Units and Their Abbreviations (abbreviations noted within parentheses):

Degree Fahrenheit (Abbreviation: °F)	Degree Celsius (Abbreviation: °C)
°F = (1.8 x °C) + 32	°C = (°F – 32)/1.8

D. SI Units Commonly Used in Both Systems and their Abbreviations (abbreviations noted within parentheses):

1 Ampere (A)
1 Volt (V)
1 Candela (cd)
1 Lumen (lm)
1 second (s)

E. Common Metric Prefixes and Their Abbreviations (abbreviations noted within parentheses):

kilo (k)	10^{3}
centi (c)	10^{-2}
milli (m)	10^{-3}
micro (μ)	10^{-6}
nano (n)	10^{-9}
pico (p)	10^{-12}

(END OF SECTION)

SECTION 01421
SYMBOLS

1.1 THE REQUIREMENT

A. The symbols as shown shall mean:

Symbol	Definition
Δ	Delta, the central angle or angle between tangents
∠	Angle
%	Percent
'	Feet or minutes
"	Inches or seconds
#	Number
/	Per or (between words)
°	Degree
ℙ	Property line
℄	Centerline
℘	Survey line or station line

(END OF SECTION)

SECTION 01452
INSPECTION OF THE WORK

1.1 THE REQUIREMENT

A. Whenever the CONTRACTOR intends to carry on the Work of this Contract on a Saturday, Sunday, or holiday, or more than eight (8) hours a day on Monday through Friday, or any variation in the time of the workday as set forth in the GENERAL CONDITIONS, length of the workday and work week, notification shall be given to the INSPECTOR and the ENGINEER of such intention at least forty-eight (48) hours in advance so that inspection may be arranged. No Work shall be allowed during these times without the approval of the INSPECTOR and no demolition will be permitted on Saturdays, Sundays, or holidays without the prior approval of the Board. All CITY inspection required by the CONTRACTOR on holidays, weekends and overtime for the sole convenience of the CONTRACTOR shall be accomplished at the sole expense of the CONTRACTOR by issuance of a deductive Change Order.

B. The Work shall be conducted under the general observation of the ENGINEER and shall be subject to inspection by the INSPECTOR to ensure compliance with the requirements of the Contract Documents. Such inspection may include mill, plant, shop or field inspection, as required. The INSPECTOR shall be permitted access to all parts of the Work, including plants where materials or equipment are manufactured or fabricated. All materials and articles furnished by the CONTRACTOR shall be subject to inspection and no materials or articles shall be used in the Work until they have been inspected and accepted by the INSPECTOR.

C. No Work shall be backfilled, buried, cast in concrete, hidden or otherwise covered until it has been inspected by the INSPECTOR, and other Agencies for which a permit is required. Whenever the CONTRACTOR is ready to backfill, bury, cast in concrete, hide, or otherwise cover any Work under the Contract, the CONTRACTOR shall notify the INSPECTOR not less than forty-eight (48) hours in advance to request inspection before beginning any such Work of covering. Failure of the CONTRACTOR to notify the INSPECTOR at least forty-eight (48) hours in advance of any such inspections shall be cause for the INSPECTOR to require a sufficient delay in the progress of Work to allow time for such inspections and any remedial or corrective work required, and all costs of such delays, including its effect upon other portions of the work, shall be borne by the CONTRACTOR. Any Work so covered in the absence of inspection shall be subject to uncovering at the sole expense of the CONTRACTOR. Where uninspected Work cannot be uncovered, such as in concrete cast over reinforcing steel, all such Work shall be subject to demolition, removal, and reconstruction under proper inspection, and no additional payment will be allowed therefor.

D. The presence of the ENGINEER or the INSPECTOR shall not relieve the CONTRACTOR of the responsibility for the proper execution of the Work in accordance with all requirements of the Contract Documents. Compliance is a duty of the CONTRACTOR, and said duty shall not be avoided by any act or omission on the part of the ENGINEER or the INSPECTOR. If the CONTRACTOR fails to replace any defective or damaged Work or material after reasonable notice, the ENGINEER may withhold progress payment for the Work or material, reserve the right to notify the CONTRACTOR'S Bond and Insurance Companies, and/or may cause such Work or materials to be replaced. The

replacement shall be deducted from the amount to be paid to the CONTRACTOR, otherwise the CONTRACTOR shall pay the CITY if there remains insufficient or no amount to be paid by the CITY to the CONTRACTOR.

E. The INSPECTOR shall have the right, at all times and places, to reject any articles or materials to be furnished hereunder which, in any respect, fail to meet the requirements of these specifications, regardless of whether the defect in such articles or materials are detected at the point of manufacture or after completion of the Work at the site. If the ENGINEER or the INSPECTOR, through an oversight or otherwise, has not rejected materials or work which is defective or which is contrary to the specifications, such material, no matter in what stage or condition of manufacture, delivery, or erection, may be rejected by the INSPECTOR upon discovery. The CONTRACTOR shall promptly remove rejected articles or materials from the site of the Work after notification of rejection. All costs of removal and replacement of rejected articles or materials as specified herein shall be borne by the CONTRACTOR.

F. At the completion of Work, after completion of all corrections, a final inspection will be made by the INSPECTOR, the ENGINEER, and the CONTRACTOR, as applicable. The INSPECTOR will provide a Final Inspection Correction List itemizing all work necessary to complete the Project satisfactorily.

G. When the correction work is found to be in compliance with the Contract Documents, the construction Work will be considered complete and the Contract time will stop. The CONTRACTOR shall proceed with the maintenance work if required by the Contract. If the correction work is found to be non-compliant with the Contract Documents, the Contract time shall be continued to be assessed until the correction is satisfactorily made and accepted by the CITY.

(END OF SECTION)

SECTION 01453
SAMPLING, TESTING AND FABRICATION INSPECTION

1.1 THE REQUIREMENT

A. General

1. All materials and fabricated articles furnished by the CONTRACTOR shall be subject to inspection and testing and no materials or fabricated articles shall be incorporated into the Work until they have been inspected and accepted by the INSPECTOR. The CONTRACTOR shall ensure that all items requiring shop inspection are inspected at their source by the INSPECTOR or by an independent inspection or testing laboratory (IITL) that has been approved by the INSPECTOR.

2. Fabrication shall be subject to inspection by the INSPECTOR, to ensure strict compliance with the requirements of the Contract Documents. Such inspection shall include mill, plant, shop or field inspection, as required. The INSPECTOR shall be permitted access to all parts of the Work, including plants where materials or equipment are manufactured or fabricated. When a third party INSPECTOR is approved, monthly meetings may be scheduled with the INSPECTOR at the manufacturing facility to review the progress of the Work and the inspection activities. The INSPECTOR will determine the number of trips based on the manufacturing schedule for the material or fabricated article(s). The CONTRACTOR shall include in the Bid all costs associated with these inspections, except for the costs for CITY personnel as set forth herein which shall be reimbursed under the Bid Item ALLOWANCE FOR CITY INSPECTION, if provided in the SCHEDULE OF WORK AND PRICES.

3. All fabricated items shall be fabricated from Shop Drawings, which have been submitted to the ENGINEER and approved in accordance with SUBMITTALS of the GENERAL REQUIREMENTS. Shop inspection shall be provided on all materials and/or equipment so designated on the CONTRACTOR'S approved Shop Drawings or Contract Documents. The CONTRACTOR shall provide approved Shop Drawings and the corresponding Contract Specification to the INSPECTOR or IITL for use in the inspection and testing of the items to be fabricated.

4. Any item requiring inspection that is delivered to the job site without having been inspected and approved by the Bureau of Contract Administration or an approved third party inspection agency will be rejected by the Project Inspector. The BCA Materials Control Group will not perform any inspection at the job site. It is the Prime CONTRACTOR'S responsibility to ensure that all items requiring shop inspection are inspected at their source by the BCA Materials Control Group, or by an inspection or testing laboratory that has been approved by the BCA Materials Control Group. The City shall be held harmless for any delays resulting from the CONTRACTOR'S or fabricator's failure to obtain the required inspections.

5. Prior to any fabrication, there shall be a Prefabrication Meeting either at the fabricator's location or via telephonic conference. A representative of the CITY and the IITL, if retained, the Prime CONTRACTOR, the

fabricator's plant superintendent and the fabricator's quality control person, shall be present at the Prefabrication Meeting. The items to be discussed are the required inspections, tests and reports, based on the approved Shop Drawings and the corresponding Contract Specifications. The IITL shall take minutes of the pre-fabrication meeting and distribute the same to the individuals in attendance. The IITL shall submit an inspection plan to the INSPECTOR for approval two (2) weeks prior to the Prefabrication Meeting. The CONTRACTOR is directed to notify the INSPECTOR and the ENGINEER three (3) weeks in advance of the date and time of the Prefabrication Meeting. The CONTRACTOR shall include in the Bid all costs associated with these meetings except for the costs for CITY personnel as set forth herein which shall be reimbursed under the Bid Item ALLOWANCE FOR CITY INSPECTION, if provided in the SCHEDULE OF WORK AND PRICES.

6. If a Bid Item ALLOWANCE FOR CITY INSPECTION has been included in the SCHEDULE OF WORK AND PRICES in the Bid Proposal, this allowance shall only be used to reimburse the CONTRACTOR for the cost of CITY inspection and travel requirements, as set forth herein, and shall not be used for any portion of the costs of the CONTRACTOR'S independent third party INSPECTOR or inspection laboratory. Reimbursement of approved expenses shall be made on the basis of original invoices and are not subject to markup for overhead and profit. If at the end of the Project, the total costs differ from the amount set forth in the SCHEDULE OF WORK AND PRICES, the Contract Price shall be adjusted by a Change Order for the difference between the total actual costs and the amount included in the Bid, as an additional amount due the CONTRACTOR or a credit to the CITY, as appropriate.

7. The CONTRACTOR shall coordinate all sampling, testing and fabrication inspections with the INSPECTOR and is responsible for maintaining the inspection schedules. Subject to the terms contained herein, costs for CITY personnel travel will be paid from the Bid item ALLOWANCE FOR CITY INSPECTION. In the event that the scheduled inspection is postponed or delayed by the CONTRACTOR, through no fault of the CITY, and CITY personnel are required to extend their travel duration resulting in additional travel costs, these increased costs, including per diem travel allowances, shall be borne by the CONTRACTOR and are not eligible for payment from the Bid item ALLOWANCE FOR CITY INSPECTION.

8. In addition to the approval of the Bureau of Contract Administration, approval may be required from the Department of Building and Safety, Materials Control Section, for certification of both the manufacturer of structural items/materials and/or the testing laboratory/inspection company. For certification information, contact:

Senior Building Inspector
Materials Control section
Dept. of Building and Safety
Telephone: (213) 482-0388

B. Samples And Test Specimens

1. Samples and test specimens required under these Specifications shall be furnished, prepared for testing, and delivered, at no cost to the CITY, in ample time for the completion of the necessary tests and analysis before said article or materials are to be used. The time and location of the delivery shall be designated by the INSPECTOR.

2. In addition to any other inspection or quality assurance provisions that may be specified, the ENGINEER or the INSPECTOR shall have the right to independently select, test, and analyze, at the expense of the CITY, additional test specimens of any or all of the materials to be used. Whenever any portion of the Work fails to meet the requirements of the Specifications, as shown by the results of independent testing or investigation, all costs of such independent inspection and investigation, and all costs of removal, correction, and reconstruction or repair of any such Work, shall be borne solely by the CONTRACTOR.

3. The INSPECTOR may allow the manufacturer, fabricator, supplier, or Subcontractor to provide the results of tests from samples taken at the mill, factory, or warehouse. The INSPECTOR will accept the test reports provided that the following conditions are met:

   a. The Testing Agency was approved by the INSPECTOR prior to performing the tests, and that all necessary certifications were valid at the time the tests were performed.

   b. The tests were performed in conformity with the Specifications for the specified materials or items.

   c. The reports are made in the form of an affidavit specified hereinafter.

4. Whenever the approved independent testing laboratory or INSPECTOR takes samples of materials other than at the site, the deliveries to the site of materials represented by such samples shall be identified as specified for the specific material. The results of such tests shall be reported to the INSPECTOR in the form of affidavits attested to by the testing agency. Such affidavits shall furnish the following information with respect to the material sampled:

   a. Manufacturer's name and brand.

   b. Place of sampling.

   c. Sufficient information to identify the lot, group, bin, or silo from which the samples were taken.

   d. Amount of material in the lot sampled.

   e. Statement that the material has passed the requirements.

f. Notarized signature and title of the person making the affidavit and the date of execution of the affidavit.

C. Shop Inspection And Testing

1. Shop Inspection and/or Material Sampling and Testing are the sole jurisdiction and responsibility of the Inspector of Public Works through the Bureau of Contract Administration's Materials Control Group. Shop Inspection and/or Material Sampling and Testing cannot be approved, waived, or otherwise altered by any other City Department, Bureau, Division, or individual. Shop Inspection required by this section is in addition to any inspections required by applicable building codes.

2. The CONTRACTOR is responsible for coordinating shop inspection with the INSPECTOR. The CONTRACTOR is to estimate the time required for Shop testing of the fabricated article(s) or equipment, and so inform the INSPECTOR. The Contractor is responsible for contacting the Bureau of Contract Administration, Materials Control Group, regarding scheduling for all Shop Inspection and/or Material Sampling and Testing. Please contact the Materials Control Supervisor at (213) 847-2442.

3. A final inspection by the INSPECTOR may be required prior to shipment. No fabricator or CONTRACTOR shall deliver fabricated materials to the project site without the approval of the BCA Materials Control Group.

4. Where the CONTRACTOR is specifically required by the Technical Specifications to demonstrate performance of major equipment prior to delivery, a testing procedure must be developed by the manufacturer and approved by the ENGINEER prior to scheduling the shop performance testing. Both the INSPECTOR and the ENGINEER are required to witness the performance testing. The ENGINEER will evaluate performance-testing data and notify the INSPECTOR whether the equipment meets the performance requirements of the Contract. The INSPECTOR will be responsible for releasing the equipment for delivery to the Jobsite. This procedure will also apply to field performance testing required as a condition precedent to acceptance of the equipment as described under the PARTIAL ACCEPTANCE and FINAL ACCEPTANCE provision of the Contract.

5. Inspection at Locations Within Thirty (30) Miles from CITY

a. When the CONTRACTOR intends to purchase materials, fabricated products, or manufactured equipment from sources located within thirty (30) miles (48 km) of the geographical limits of the CITY, the CONTRACTOR shall notify the INSPECTOR at least 24 hours prior to the scheduled date of tests at all stages of manufacture to allow for arrangements specified herein.

b. Except as otherwise provided in these Specifications, performance of the required sampling and tests will be under the direction of the INSPECTOR, from samples provided by the CONTRACTOR, and the cost of performing the test(s) will be

borne by the CITY, except for the costs of any retests which show unsatisfactory results which shall be borne by the CONTRACTOR.

6. Inspection at Locations More Than Thirty (30) Miles From the CITY

a. When the CONTRACTOR intends to purchase materials, fabricated products, or equipment from sources located more than thirty (30) miles (48 km) outside the geographical limits of the CITY, an IITL approved by the INSPECTOR, shall be engaged by the CONTRACTOR, at the CONTRACTOR'S sole expense, to inspect the materials, equipment and/or process, unless the City elects to perform the inspection with BCA Materials Control Personnel,. Approval of the IITL shall be obtained from the BCA Materials Control Group before producing any material or equipment. The IITL shall judge the materials and fabricated articles by the requirements of the Plans and Specifications and approved submittals. The IITL shall be accountable to the BCA Materials Control Group and shall provide written records of all inspections performed to the Group in a format approved by that Group. No equipment or material shall be shipped nor shall any processing, fabrication and/or treatment of such equipment or materials be done without the required inspection and approval by IITL. Approval by IITL shall not relieve the CONTRACTOR of its responsibility to comply with the Contract requirements. The City retains the right to perform inspection or testing at any remote site with City personnel. If the City exercises this right, the contractor will be required to pay for all costs associated with this inspection and testing, except the Inspectors' wages, unless reimbursement is provided under the bid item ALLOWANCE FOR CITY INSPECTION as listed in the SCHEDULE OF WORK AND PRICES.

b. The CITY retains the right to perform inspection or testing at such remote sites with CITY personnel in lieu of a third party inspector. In the event the CITY exercises this right, the CONTRACTOR shall administer travel arrangements as specified herein Paragraph C.10, CITY PERSONNEL TRAVEL REQUIREMENTS.

7. Inspection Outside Continental United States

a. Requirements and procedures for inspection and testing of materials, fabrication of products and equipment from sources outside the continental United States shall be the same (including the requirement for an accredited inspection agency and/or testing laboratory pre-qualified by the CITY Department of Building and Safety and approved by the INSPECTOR) as provided in the Paragraph C.7 SHOP INSPECTION & TESTING of this Section. In addition to the requirements of Paragraph C.10, City Personnel Travel Requirements, of this Section, the CONTRACTOR shall provide the following, the cost of which shall be reimbursed out of the ALLOWANCE FOR CITY

INSPECTION item, if provided in the SCHEDULE OF WORK AND PRICES.

(1) A minimum of five (5) calendar days hotel accommodation shall be required for each shop inspection visit made by the INSPECTOR.

(2) A minimum advance notice of ten (10) working days shall be required for all hold points (mandatory) inspection.

(3) The approximate rates for allowances given as a guideline in Paragraph C.10, City Personnel Travel Requirements, of this Section, shall be adjusted to match the rates in the foreign locality for similar types of facilities and amenities.

8. Third Party Inspection Requirements

a. The proposed third party inspection and/or testing company must gain approval by the INSPECTOR after award. This approval shall be obtained before producing any material or manufacturing any product or equipment. The approved inspection and/or testing agency shall not sublet or assign its work to any other agency.

b. The approved third party inspection and/or testing agency shall take direction from, and be responsible to, the INSPECTOR.

c. The CONTRACTOR shall also comply with requirements regarding the Prefabrication Meeting as contained herein.

d. The Work and activities of the third party inspection and/or testing agency shall be monitored by the INSPECTOR during monthly meetings to ensure compliance with the Contract Documents.

9. Third Party Testing and Inspection Laboratory Approval Procedures

a. The INSPECTOR will approve third party inspection and/or testing agencies/laboratories. The City of Los Angeles has a contract only with the Prime CONTRACTOR. The City of Los Angeles has no Third Party agreement with any subcontractor, plant, manufacturer, or fabricator. All are considered employees of the Prime CONTRACTOR and the Prime CONTRACTOR shall be responsible for their work. The Supervisor of the Materials Control Group of the Bureau of Contract Administration acts on behalf of the INSPECTOR of Public Works Therefore, all requests for the approval of a third party inspection or testing company shall be from the Prime CONTRACTOR, typewritten on the Prime CONTRACTOR'S letterhead, addressed to the Supervisor of the BCA Materials Control Group (213) 847-2442 as follows:

Bureau of Contract Administration
General Services Division
Materials Control Group
1149 S. Broadway, Suite 300
Los Angeles, CA 90015

One (1) duplicate copy of the request shall be sent to the ENGINEER.

b. The letter requesting approval of a third party test lab or private inspection company shall contain all of the following information:

PROJECT DATA

(1) Complete title of the project.
(2) The project work order number.
(3) The approved submittal number(s) and a brief description of the item(s) to be inspected tested with their Specification Division and Section number.

PROPOSED INSPECTION

(1) Names of two (2) proposed testing laboratories or inspection companies.
(2) Addresses and telephone numbers of the proposed test labs/inspection companies.
(3) Contact person at the proposed test labs/ inspection companies.
(4) Description and history of the proposed test laboratories/inspection companies.
(5) Resumes of at least two (2) or more inspectors (primary and alternate) who will perform the physical inspections.
(6) Samples of all inspection reporting documents utilized by the provider and a written description of the reporting methodology.

FABRICATOR DATA

(1) Company name, address, and telephone number of the actual production site for each fabricator.
(2) Contact person at each fabricator.
(3) Fabrication schedule.

c. The INSPECTOR will notify the CONTRACTOR by letter if the testing laboratory/inspection agency has been approved.

d. The Materials Control Group may order modifications of the inspection reporting procedure utilized by the provider prior to approval.

10. CITY Personnel Travel Requirements

a. The CONTRACTOR shall administer the travel and furnish the following services for CITY personnel who are attending Prefabrication Meetings and performing inspection services.

(1) Purchase airline tickets (Coach Class only).

(2) Make hotel reservations and prepay for the planned number of nights. (Three Star or American Automobile Association (AAA) Three Star approved.)

(3) Make rental car reservations and prepay for the planned number of days if the manufacturer's or fabricator's facility is greater than one (1) mile from the departing and arrival airport or hotel.

(4) The estimated per diem travel allowance will be at least fifty U.S. dollars ($50.00) per day for meals, en route expenses, and other miscellaneous expenses. CITY personnel will submit an expense statement to the CITY for approval of actual expenses incurred.

(5) For CITY paid advances, the CONTRACTOR shall reimburse the CITY for these actual expenses by deductive Change Order to be deducted from the Bid item, ALLOWANCE FOR CITY INSPECTION.

(6) When requested by the ENGINEER or the INSPECTOR, the CONTRACTOR shall provide an advance check, for the estimated costs of all travel allowance costs, to the ENGINEER or the INSPECTOR, no later than forty eight (48) hours prior to the departure time. Failure to provide all accommodations described herein in such a manner to adequately facilitate the travel activity will cause the inspection visit to be canceled, and any costs or delays owing to such rescheduling shall be born by the contractor.

b. As the basis for cost reimbursement under SCHEDULE OF WORK AND PRICES of the Bid Proposal, the CONTRACTOR shall submit receipts or invoices for payment to the ENGINEER with a cover letter referencing the following:

(1) INSPECTOR’S or ENGINEER’S name.

(2) Project title.

(3) Project Work Order Number.

(4) CONTRACTOR’S:

(a) Name

(b) Address

(c) Telephone Number.

(d) CONTRACTOR'S contact person and telephone number(s)

(5) Reference Technical Specification and submittal number.

(6) Purpose of inspection.

(7) Address and location of inspection:

(8) Country

(9) State

(10) City.

(11) Date(s) of inspection.

(12) Description of items enclosed as set forth herein

11. Shop Inspected Equipment/Materials:

a. Without waiving any specific requirement of the Contract Documents, the following items of equipment and/or material are examples of, but not limited to those items that are subject to shop inspection as noted herein below.

Equipment/ Materials	Spec. Sect.	Insp. Req'd	Product Identification	See Notes
Aluminum Fabrication	05530/08410/08416/08520	YES	Inspector Witness – Yellow Tag	G.N.1
Aluminum Railings	05520	YES	Yellow Tag	G.N.5
Anodizing	05035/09800	YES	Yellow Tag	G.N.18
Asphalt Material	02710	YES	Batch Plant Insp. Report #1101	G.N.8
Base Material	02310	NO	Standards Div. Approves Source	
Bearing Pads	05120	YES	Yellow Tag	G.N.31
Bolting	05120	YES	Inspector Witness - Yellow Tag	G.N.2

Bitumen	07160	YES	Insp. Witness & meas. thickness	G.N.18
Boilers	11915	YES	Yellow Tag	G.N.7
Castings	05530	YES	Stamped **"L.A. City Approved"**	G.N.4
Coatings	Div. 9/05530	YES	Insp. Witness & meas. thickness	G.N.18
Cabinets – Wood	06200/06400	NO		G.N.17
Compressors	11870/11875/11880	YES	Yellow Tag	G.N.20
Crane Systems	14320/14600/14630	YES	Yellow Tag	G.N.19
Conveyors	14605	YES	Yellow Tag	G.N.19
Concrete	03300	YES	Batch Plant Insp. Report # 1101	G.N.8
Concrete-Fiberglass Reinf.	03400	YES	Batch Plant Insp. Report # 1101	G.N.12
Concrete – Mix Designs	03300	YES	Batch Plant Insp. Report # 1101	G.N.8
Concrete – Precast	03400	YES	Stamped **"LA City Approved"**	G.N.9
Concrete – Prestressed	02465/03400	YES	Yellow Tag or Stamped	G.N.9
Concrete Vaults	02585	YES	Stamped "**LA City Approved**"	G.N.11
Catch Basins	02545	YES	Yellow tag for bulb Angle & Grating	G.N.11
Chain Link Fabric	02821	YES	Yellow Tag	G.N.18
Doors – Metal	08110	YES	Yellow Tag	G.N.6
Door Frames - Metal	08110	YES	Yellow Tag	G.N.6
Ductwork – Fiberglass	13390/15170	YES	Yellow Tag	G.N.27
Ductwork – Flexible	15170	NO		G.N.27
Ductwork – Metal	15210	NO		G.N.27
Ductwork – Stainless steel	15210	YES	Yellow Tag	G.N.27
Electrical - Controls	17400/17410	YES		G.N.24
Electrical Motors	16490	YES	Yellow Tag	G.N.20
Electrical Panels	16330	YES	Yellow Tag	G.N.22
Electrical Switchgear	16240	YES	Yellow Tag	G.N.22
Electrical Testing	16030	YES	Inspector Witness	G.N.25
Electrical Transformers	16230/16320	YES	Yellow Tag	G.N.22

TABLE *Continued*

Equipment/ Materials	Spec. Sect.	Insp. Req'd	Product Identification	See Notes
Electrical Units	Div 16	YES	Yellow Tag	G.N.25
Electrical Wiring	16150/16160	YES	Inspector Witness	G.N.24
Escalators	Div 14	YES	Yellow Tag	G.N.19
Elevators	14200/14241	NO		G.N.19
Fiberglass	06610	YES	Yellow Tag	G.N.30
Frames – Metal	05500	YES	Yellow Tag	G.N.6
Forgings	Div. 5	YES	Stamped **"LA City Approved"**	G.N.4
Galvanizing	Div. 5	YES	Inspector Witness – Yellow Tag	G.N.18
Gratings	Div. 5	YES	Yellow Tag	G.N.4
Gaskets	07900	YES	Yellow Tag	G.N.11
Generators	16410	YES	Yellow Tag	G.N.22
Glue-Laminated Beams	06181	NO	Certificate of Compliance (Forestry)	G.N.16
Grout	04230	YES	Batch Plant Insp. Report #1101	G.N.13
Gypsum	09200	YES	Batch Plant Insp. Report #1101	G.N.13
Gypsum –Fiberglass Reinf	03520	YES	Batch Plant Insp. Report #1101	G.N.12
Hoists	14320/14600	YES	Yellow Tag	G.N.19
HVAC	15130	NO		G.N.26
Linings – Pipe	09800	YES	Inspector Witness – Yellow Tag	G.N.18
Lumber	06100	NO	Treated Lumber Stamped "LA"	G.N.16
Lighting Fixtures	16360/16370	NO		G.N.23
Lamps	16360/16370	NO		G.N.23
Motors	16490	YES	Yellow Tag	G.N.20
M.H. –Frames/Covers Cast Iron	02585	YES	Stamped "LA" on Cover & Frame	G.N.4
M.H. –Frames/Covers Steel	02585	YES	Stamped "LA" on Inner-Cover only	G.N.4
M.H. –Precast w/Epoxy Coating	02585	YES	Stamped "LA" or Yellow Tag	
M.H. –Shafts/Grade Rings	02585	YES	Stamped "LA" or Yellow Tag	G.N.11
Masonry	04230	NO		G.N.14
Mechanical Equipment	Div. 15	YES	Yellow Tag	G.N.20
Millwork	06200	NO		G.N.17
Misc. Metal Fabrication	05500	YES	Yellow Tag	G.N.1
Mortar	04230	YES	Batch Plant Insp. Report #1101	G.N.13
Non-Destructive Testing	05120	YES	Inspector Witness	G.N.1

TABLE *Continued*

Equipment/ Materials	Spec. Sect.	Insp. Req'd	Product Identification	See Notes
Pressure Vessels	Div. 13	YES	Yellow Tag	G.N.7
Painting (Coating Systems)	09900/ 09905	YES	Yellow Tag	G.N.18
Pilings	02465/ 02460/ 02470	YES	Yellow Tag	G.N.9
Pipe – Fiberglass		YES	Yellow Tag	G.N.15
Pipe - Plastic	02510	NO	Standards Div will issue a batch #	G.N.29
Pipe – Reinf. Concrete	02250/ 2560/0 2565	YES	**LA City Approved** stamp w/ a 3 digit # if approved and a 5 digit number if not approved	G.N.11
Pipe - Steel	Div 15	YES	Yellow Tag	G.N.15
Pipe Supports	15770	YES		G.N.15
Pipe – Vitrified Clay	GB	NO	Standards Division will stamp 3-digit number and **"LA City Approved DPW"** inside full lengths of pipe	G.N.15
Pipe Welding	15610	YES		G.N.15
Plastic Liner Plate	09800	YES		G.N.29 (a)
Pullbox – Street Light & Traffic Signal.		YES	Stamped **"LA City Approved"** on the inside of the box	
Pre-Engineered Metal Buildings		YES		G.N.1
Pumps	Div. 11	YES	Yellow Tag	G.N.20
PVC Liner	09800	YES		G.N.29 (a)
Railings	05520	YES	Yellow Tag	G.N.5
Rebar	03200	YES	Yellow Tag	G.N.3
Sandblasted Steel Items	Div. 5	YES		
Slide Gates	11815	YES	Yellow Tag	G.N.21
Sluice Gates	11182 0	YES	Yellow Tag	G.N.21
Steel Doors	08110	YES	Yellow Tag	G.N.6
Steel – Stainless	05500	YES		G.N.1
Steel Structural	05120	YES	Yellow Tag	G.N.1
Steel Supports	05120	YES	Yellow Tag	G.N.1
Store Fronts	08410/	YES	Yellow Tag	G.N.28

	08416			
Street Lgt. Standards	03400	YES	Stamped **"LA City Approved"** or **"Third Party Insp. Agency"** at the bottom of the base	G.N.10
T-Lock Liner Plate		YES	Yellow Tag	

TABLE *Continued*

Equipment/ Materials	**Spec. Sect.**	**Insp. Req'd**	**Product Identification**	**See Notes**
Tanks – Storage	Div. 13	YES	Yellow Tag	G.N.7
Tanks – Steel	13310	YES	Yellow Tag	G.N.7
Tree Well – Cast Iron		YES	Stamped **"LA"** or Yellow Tag	
Tree Well – Architectural		YES	Stamped **"LA"** or Yellow Tag	
Tree Well – Per Std. Plans		NO		
Vessels	Div. 13	YES	Yellow Tag	G.N.7
Vaults	02585	YES	Stamped **"LA"** or Yellow Tag	G.N.11
Valves	1Div. 15	YES	Yellow Tag	G.N.20
Welding	Div. 5	YES	Inspector Witness – Yellow Tag	G.N.1
Wire Rope		YES	Yellow Tag	
Wood Paneling	06200	NO		G.N.17
Wood Trusses-Engineered		NO	Provide Manufacturer's Certification	

NOTES:

1. Fabrication of ferrous materials, which may include welding, high strength bolting or non-destructive testing shall be shop inspected.

2. Bolting with ASTM A-325 bolts, ASTM A-490 bolts or other alternate fasteners shall require shop inspection. Bolting with ASTM A-307 bolts does not require shop inspection.

3. Reinforcing steel is normally sampled at the Jobsite, but for expediency, the sampling will be performed at the point of fabrication by the CITY'S Standards Division.

4. All forging and castings made at the foundry shall be shop inspected, approved and stamped prior to delivery to the Jobsite.

5. Steel stairways and handrails (ferrous) require shop inspection for welding and specified coatings.

6. Metal door and frame fabrication requires shop inspection.

7. Pressure vessels, tanks, boilers and related equipment do require inspection of fabrication, welding, and testing.

8. Concrete, asphalt concrete and mix designs are inspected at the batch plant. These products are shop inspected for conformance to Specifications and verification by the INSPECTOR.

9. Both pre-cast and pre-stressed concrete are subject to shop inspection and approval before delivery to the Jobsite.

10. Street lighting standards of either steel, aluminum or concrete are required to be shop inspected.

11. Reinforced concrete vaults catch basins, and reinforced pipe are required to be shop inspected. (See Note 9.) Maintenance hole shafts and grade rings without reinforcement or linings do not require shop inspection. Gaskets used for reinforced concrete pipe require testing.

12. FGRC and FGRG (Fiberglass Reinforced Concrete and Fiberglass Reinforced Gypsum) should be manufactured in an approved shop and be shop inspected.

13. Mortar, grout and gypsum shall be inspected at the batch plant, unless the products are mixed at the Jobsite from approved packages under the inspection of the INSPECTOR.

14. Concrete Masonry Units (CMU) shall be inspected and sampled at the Jobsite.

15. Lining and coating of ductile iron pipe and fiberglass pipe, as well as welded supports, are subject to shop inspection. Vitrified Clay Pipe (VCP) is exempt, as are non-welded pipe supports which can be classified as standard or catalog items. The CITY'S Standards Division will provide the inspection and testing for VCP.

16. Shop inspection is not required for lumber, unless it is treated lumber. Glue-laminated products do not require shop inspection. Each "Glue Lam" shall come with an individual Certificate of Compliance.

17. Millwork and wood products are not required to be shop inspected, unless the Specifications call for equivalency or inspection by the Woodworking Institute of California (W.I.C.).

18. Specified coatings including, but not limited to, anodizing, bitumen, epoxy, galvanizing, polyvinylidene fluoride, and pipe linings and coatings shall be shop inspected.

19. Conveying equipment, such as elevators, escalators, or conveyors are exempt from shop inspection. However, the structural framework of the escalators, hoists, cranes and lifts do require inspection.

20. Mechanical equipment, such as compressors, pumps, motors and valves, require shop inspection for fabrication, tests of windings, and any specified coating. Pumps, valves and motors may be exempt if they are standard or catalog items.

21. Fabrications of sluice gates and slide gates are subject to shop inspection for fabrication, welding and coating.

22. Transformers rated at 600 volts and higher, transformers rated at 100 KVA and higher, generators, switchgear motor drives and complex wired panel boards require shop inspection.

23. Lighting fixtures and lamps are considered standard or catalog items and are exempt from shop inspection.

24. Electrical wiring and testing, performed in the shop, requires inspection to verify conformance with applicable Specifications.

25. Shop tests specified in the Specifications including, but not limited to, voltage, grounding, loads, performance, installation, temperature, or noise levels will require shop inspection.

26. HVAC (heating, ventilation and air conditioning) are subject to shop inspection for fabrication and welding. Each component will be evaluated for possible inspection.

27. Sheet metal ductwork is not shop inspected. Flexible ductwork is considered a standard or catalog item and no shop inspection is required. Ductwork made of aluminum, stainless steel, or fiberglass will require shop inspection.

28. Storefronts and wall systems are shop inspected. Fixed windows are standard items and have no need of inspection.

29. Plastic pipe, such as ABS or PVC does not require shop inspection. The pipe will be inspected and sampled for testing at the Jobsite. (a) Extruded plastic liner plate and PVC Liner will require shop inspection.

30. Fiberglass products, because of the resins and the fiber reinforcement, do require shop inspection.

31. Elastomeric bearing pads shall be tested according to Cal-Trans Standard Specification Section 51-1.12H. Sampling will be done by the INSPECTOR.

(END OF SECTION)

SECTION 01454
WEIGHING AND METERING EQUIPMENT

1.1 THE REQUIREMENT

A. It is the CONTRACTOR'S responsibility to ensure that all scales and metering equipment used for proportioning materials shall be inspected for accuracy and certified within the past twelve (12) months by the State of California Bureau of Weights and Measures, by the County Director or Sealer of Weights and Measures, or by a scale mechanic registered with or licensed by the County.

B. The accuracy of the work of a scale service agency, except as stated herein, shall meet the standards of the California Business and Professions Code and the California Code of Regulations pertaining to weighing devices. A certificate of compliance shall be presented, prior to operation, to the ENGINEER for approval and shall be renewed whenever required by the ENGINEER at no cost to the CITY.

C. All scales shall be arranged so they may be read easily from the operator's platform or area. They shall indicate the true net weight without the application of any factor. The figures of the scales shall be clearly legible. Scales shall be accurate to within one percent (1%) when tested with the plant shut down. Weighing equipment shall be so insulated against vibration or moving of other operating equipment in the plant area that the error in weighing with the entire plant running will not exceed two percent (2%) for any setting nor one-and-one-half percent (1.5%) for any batch.

(END OF SECTION)

SECTION 01455
CALIBRATION OF TESTING EQUIPMENT

1.1 THE REQUIREMENT

A. It is the CONTRACTOR'S responsibility to ensure that testing equipment such as, but not limited to, pressure gages, metering devices, hydraulic systems, force (load) measuring instruments, and strain-measuring devices shall be calibrated by a testing agency acceptable to the ENGINEER at intervals not to exceed twelve (12) months and following repairs, modification, or relocation of the equipment. Calibration certificates shall be provided when requested by the ENGINEER.

(END OF SECTION)

SECTION 01561
ENVIRONMENTAL CONTROL

1.1 THE REQUIREMENT

A. Explosives for Blasting

1. The use of explosives for blasting purposes on the work shall not be permitted.

B. Fugitive Dust and Smoke Control

1. The CONTRACTOR shall furnish all labor, equipment, and means required and shall carry out effective measures wherever and as often as necessary to prevent its operation from producing dust in amounts damaging to property, cultivated vegetation, or domestic animals, or causing a nuisance as defined by the ENGINEER. The CONTRACTOR shall be responsible for any damage resulting from any dust originating from its operations. The dust abatement measures shall be continued until the CONTRACTOR is relieved of further responsibility by the ENGINEER. No separate payment shall be allowed for dust abatement measures and all costs thereof shall be included in the CONTRACTOR's Bid. The use of water resulting in mud on streets, sidewalks, driveways, shall not be permitted as a substitute for sweeping or other methods of dust control.

2. The CONTRACTOR shall not discharge smoke, dust, or any other air contaminants into the atmosphere in such quantity as will violate the regulations of any legally constituted authority.

3. The CONTRACTOR shall comply with the requirements of Title 8, California Code of Regulations, concerning handling of asbestos dust.

C. Rubbish Control

1. Through all phases of construction, including suspension of Work and until final acceptance of the Project, the CONTRACTOR shall keep the Worksite and other areas used by it in a neat and clean condition, and free from any accumulation of rubbish and debris. The CONTRACTOR shall dispose of all rubbish and waste materials of any nature occurring at the Worksite and shall establish regular intervals of collection and disposal of such materials and waste. The CONTRACTOR shall also keep its haul roads free from dirt, rubbish, and unnecessary obstructions resulting from its operations. Care shall be taken to prevent spillage on haul routes. Any such spillage shall be removed immediately and the area cleaned by the CONTRACTOR. Equipment and material storage shall be confined to areas approved by the ENGINEER. Disposal of all rubbish and surplus materials shall be off the site of construction, at the CONTRACTOR's expense, all in accordance with local codes and ordinances governing locations and methods of disposal, and in conformance with all applicable safety laws, and the requirements of the OSHA Safety and Health Standards for Construction. All cleanup cost shall be included in the CONTRACTOR's Bid.

D. Sanitation

1. Fixed or portable chemical toilets shall be provided for the use of the CONTRACTOR's employees. These accommodations shall be maintained in a neat and sanitary condition. Toilets at construction sites shall conform to the requirements of Title 8, California Code of Regulations.

2. Wastewater conveyance and disposal shall not be interrupted. Should the CONTRACTOR disrupt existing sewer facilities, sewage shall be conveyed in closed conduits and disposed of in a sanitary sewer system. Sewage shall not be permitted to flow in trenches or be covered by backfill.

3. The CONTRACTOR shall establish a regular schedule for collection of all sanitary and organic waste. All wastes and refuse from sanitary facilities provided by the CONTRACTOR or organic material wastes from any other source related to the CONTRACTOR's operations shall be disposed of away from the site in a manner satisfactory to the INSPECTOR and in accordance with all laws and regulations pertaining thereto. Disposal of all such wastes shall be at the CONTRACTOR's expense.

E. Chemicals

1. The following paragraph does not relieve the CONTRACTOR from its responsibility for obtaining prior approval from the ENGINEER for chemical usage when otherwise required.

2. The CONTRACTOR shall provide four (4) copies of the MSDS to the INSPECTOR for all chemicals used during project construction or furnished for project operation, prior to bringing them on site, whether defoliant, soil sterilant, herbicide, pesticide, disinfectant, polymer, reactant, or of other classification, which shall show approval of either the U.S. Environmental Protection Agency or the U.S. Department of Agriculture. Use of all such chemicals and disposal of residues shall be in strict accordance with the printed instructions of the manufacturer and with all other applicable laws and regulations.

F. Lead paint notification

1. The CONTRACTOR is hereby notified that the facility under this Contract may contain Lead (Pb), Chromium (Cr) and Molybdenum (Mo).

2. If any paints containing Lead or Chromium are to be physically disturbed or made airborne during the progress of the Work by activities such as abrasive blasting, welding, cutting or torch burning, the CONTRACTOR shall provide appropriate worker protection in accordance with OSHA Lead in Construction Standard and in any other applicable regulations.

3. All paint which is removed or disturbed during the progress of the Work or any demolition debris which contains these paints, either of which contains in excess of 5 ppm (mg/l) Lead or Hexavalent Chromium when tested in accordance with the Waste Extraction Test (WET) method of the California Code of Regulations, Title 22, shall be disposed of as

hazardous waste. The CONTRACTOR shall be responsible for such disposal in accordance with all applicable laws and regulations.

G. Hazardous Waste

1. Hazardous waste generated by the CONTRACTOR at the site shall be disposed of in accordance with NOTIFICATION OF HAZARDOUS SUBSTANCES of the General Conditions.

H. Odor Control

1. The CONTRACTOR shall furnish all labor, materials, and equipment required and shall carry out effective measures whenever and as often as necessary to prevent the discharge of a nuisance odor from its operation into the atmosphere in such quantity as will violate the regulations of any legally constituted authority. During construction, the CONTRACTOR shall notify the ENGINEER and the INSPECTOR at least forty-eight (48) hours in advance when potential odor-causing activities are scheduled for construction.

I. Drainage Control

1. The CONTRACTOR shall maintain drainage within and through the Work areas. Earth dams will not be permitted in paved areas. Temporary dams of sandbags, asphaltic concrete, or other acceptable material will be permitted when necessary. Such dams shall be removed from the site as soon as their use is no longer necessary.

J. Graffiti Control

1. Throughout all phases of Work, including suspension of work, and until final acceptance, the CONTRACTOR shall keep all equipment, field offices, storage facilities and other facilities free of graffiti. Graffiti shall be painted over, masked or cleaned off within twenty-four (24) hours after notification by the INSPECTOR

K. Vermin Control

1. At the time of acceptance, structures entirely constructed under the Contract shall be free of rodents, insects, vermin, and pests. Necessary extermination work shall be arranged and paid for by the CONTRACTOR as part of the work within the contract time, and shall be performed by a licensed exterminator in accordance with requirements of governing authorities. The CONTRACTOR shall be liable for injury to persons or property and responsible for the elimination of offensive odors resulting from extermination operations.

(END OF SECTION)

SECTION 01562
ENVIRONMENTAL MITIGATION

1.1 THE REQUIREMENT

A. The CONTRACTOR shall mitigate the adverse environmental impacts associated with the Work of the Contract. The CONTRACTOR shall indemnify and hold harmless the CITY from any and all fines, penalties or damages incurred by the CITY for violation of any environmental mitigation measures or permit caused by the CONTRACTOR's failure to comply with environmental mitigation measures of this Article. The measures that the CONTRACTOR shall take to mitigate environmental impacts include, but are not limited to the following:

1. Implement a Fugitive Dust and Erosion Control Plan (FDECP) that meets or exceeds SCAQMD requirements and the CITY'S FDECP for this site.

2. Comply with the General Construction Activity Storm Water Permit and the Storm Water Pollution Prevention Plan for this site.

3. Comply with the requirements of NOTIFICATION OF HAZARDOUS SUBSTANCES of the General Conditions.

4. Protect sensitive habitats and species through the use of fencing, to prohibit construction personnel access to adjacent habitat areas, and with dust control measures of the FDECP, and such other measures that may be called for by the Environmental Impact Report for this project.

5. Comply with the following emission control measures to minimize construction activity emissions, at no additional cost to the CITY:

a. Stop construction activities during Stage II smog alerts which will be announced to the CONTRACTOR by the ENGINEER;

b. Reduce construction equipment emissions by shutting off all equipment not in actual use;

c. Reduce construction-related traffic congestion;

d. Provide rideshare incentives for construction personnel;

e. Tune and maintain construction equipment properly;

f. Use low-sulfur/low nitrogen fuel for construction equipment, if available;

g. Provide transit incentives for construction personnel;

h. Configure construction parking to minimize traffic interference;

i. Minimize obstruction of through-traffic lanes;

j. Provide a flagperson to facilitate traffic flow and prevent traffic congestion;

k. Schedule operations affecting roadways for off-peak traffic hours.

B. Comply with the more stringent requirements of the current CITY or local noise ordinances, which may include:

1. Construction of noise barriers;

2. Use of low-noise-generating construction equipment;

3. Maintenance of mufflers and ancillary noise abatement equipment;

4. Use of vibration pile drivers and other techniques that result in less noise than impact pile drivers;

5. Scheduling high noise producing activities during periods that are least sensitive;

6. Routing construction related truck traffic away from noise-sensitive areas;

7. Reducing construction vehicle speeds.

C. The CONTRACTOR, a minimum of thirty (30) days prior to beginning work on each new major activity, shall submit a written plan to the ENGINEER, for approval, detailing how the environmental impacts for the activity shall be mitigated**.** The plan shall include, at a minimum:

1. Anticipated site conditions;

2. Equipment to be utilized;

3. Means and methods of construction;

4. Impacts likely to occur;

5. Mitigation methods to be employed.

(END OF SECTION)

SECTION 01563
POLLUTION CONTROL - SEWAGE SPILL PREVENTION AND RESPONSE REQUIREMENTS

1.1 THE REQUIREMENT

A. General

1. The CONTRACTOR shall observe and comply with the CITY's policy of "ZERO SANITARY SEWER OVERFLOWS".

2. The CONTRACTOR shall be in full charge and be responsible for the Jobsite, the construction Work of this Contract, and subject to the directions of the ENGINEER or the INSPECTOR.

3. The CONTRACTOR shall observe and comply with all Federal, State, and local laws, ordinances, codes, orders, and regulations which in any manner affect the conduct of the work, specifically as it relates to sewage spills.

4. The CONTRACTOR shall be fully responsible for preventing sewage spillage, containing any sewage spillage, recovery and legal disposal of any spilled sewage, any and all fines, penalties, claims and liability arising from negligently causing a sewage spillage and any violation of any law, ordinance, code, order, or regulation as a result of the spillage.

5. The CONTRACTOR shall exercise care not to damage existing public and private improvements, interrupt existing services and/or facility operations which may cause a sewage spill. Any reasonably anticipated utility and/or improvement which is damaged by the CONTRACTOR shall be immediately repaired at the CONTRACTOR's expense. In the event that the CONTRACTOR damages an existing utility, interrupts an existing service which causes a sewage spill, the CONTRACTOR shall immediately notify the CITY representatives. The CONTRACTOR shall request and obtain from the ENGINEER an emergency roster of the designated CITY representatives with their respective telephone numbers, pager numbers, and cellular phone numbers. The CONTRACTOR shall take all measures necessary to prevent further damage or service interruption, and to control, contain and clean up the resultant impacts of the damage, service interruption and any resulting sewage spill(s) as mentioned in Section 1.1.A. 6, below.

6. Prior to the start of construction, the CONTRACTOR shall develop and submit to the ENGINEER, for review and approval, a written Spill Response Plan. The Spill Response Plan shall be developed to respond to any construction related sewage spill. This shall include, but is not limited to:

   a. The CONTRACTOR shall identify all nearby waterways, channels, catch basins and entrances to underground existing storm drains and furnishing all of the necessary materials, supplies, tools equipment, labor and other services.

b. The CONTRACTOR shall make arrangements for an emergency response unit comprised of emergency response equipment and trained personnel to be immediately dispatched to the Jobsite in the event of a sewage spill(s).

c. The CONTRACTOR shall develop and include an emergency notification procedure, which includes an emergency response roster with telephone numbers and arrangements for backup personnel and equipment and an emergency notification roster of the design CITY representatives. The CONTRACTOR shall designate a primary and secondary representative and include their respective phone numbers, pager numbers, and cellular phone numbers. The CONTRACTOR's representatives shall be accessible and available at all times to respond immediately to any construction related emergency.

7. If called for in the Plans and/or Specifications, or if sewer bypass is needed to construct the Project, the CONTRACTOR shall continuously monitor the flow levels downstream and upstream of the construction location to detect and possible failure that may cause a sewage backup and spill. The CONTRACTOR shall include the means and methods of monitoring the flow in their Spill Response Plan.

a. In case of sewage spill, the CONTRACTOR shall act immediately without instructions from the CITY, to control the spill and take all appropriate steps to contain it in accordance with their Spill Response Plan. The CONTRACTOR shall immediately notify the CITY representatives of the spill and all actions taken. The CONTRACTOR shall, within three (3) working days from the occurrence of the spill, submit to the ENGINEER a written confirmation describing the following information related to the spill: the location on a current Thomas Bros. guide map; the nature and volume; the date and time; the duration; the cause; the type of remedial and/or preventive action taken; and the water body impacted and results of any necessary monitoring. Requests for additional compensation for the handling of the spill shall be submitted to the ENGINEER as a construction claim. The CONTRACTOR shall assure the validity, accuracy, and correctness of the claim under penalty of perjury. The ENGINEER may institute further corrective actions, as deemed necessary, to fully comply with existing law, ordinance, code, order or regulation. The CONTRACTOR shall be responsible for all costs incurred for the corrective actions.

b. It shall be the CONTRACTOR's responsibility to assure that all field forces, including Subcontractors, know and obey all safety and emergency procedures, including the Spill Response Plan, to be maintained and followed at the Jobsite.

B. Sewer Bypass

1. The CONTRACTOR shall provide temporary means to maintain and handle the sewage flow in the existing system as required to complete the necessary construction.

2. The CONTRACTOR shall prepare and submit a detailed bypass plan to the ENGINEER for approval of the ENGINEER and the facility OWNER before the bypass is installed.

3. The CONTRACTOR shall size the bypass system to handle the peak flow of the system. The CONTRACTOR shall include a one-hundred percent (100%) backup in the bypass system. The CONTRACTOR shall utilize the backup system to mitigate any additional wet weather flows, perform the necessary maintenance and repairs on the bypass system, and exercise and ensure the operability of the backup system. Each pump, including the backup pumps, shall be a complete unit with its own suction and discharging pumping. The CONTRACTOR shall operate the backup bypass system for a minimum of twenty-five percent (25%) of the time on a weekly basis. The backup bypass system shall be fully installed and operational.

4. Prior to the full operation of the bypass system, the CONTRACTOR shall demonstrate, to the satisfaction of the ENGINEER and INSPECTOR, that both the primary and backup bypass systems are fully functional and adequate, and shall certify the same, in writing, to the ENGINEER in a manner acceptable to the ENGINEER.

5. The CONTRACTOR shall provide one dedicated fuel tank for every single pump/generator, if fuel/generator driven pumps are used. The CONTRACTOR shall provide a fuel level indictor outside each fuel tank. The CONTRACTOR shall continuously (while in use) monitor the fuel level in the tanks and ensure that the fuel level does not drop below a level equivalent to two (2) hours of continuous bypass system operation. The CONTRACTOR shall take the necessary measures to ensure the fuel supply is protected against contamination. This includes, but is not limited to, fuel line water traps, fuel line filters, and protecting fuel stores from precipitation.

6. The CONTRACTOR shall provide an emergency standby power generator, if electric power driven pumps are used.

7. The CONTRACTOR shall continuously (while in use) monitor the operation of the bypass system and all impacted facilities. The CONTRACTOR shall submit, as part of their bypass plan, their monitoring procedure and frequency. The CONTRACTOR shall maintain a log of the monitoring in a manner acceptable to the ENGINEER and INSPECTOR.

8. The CONTRACTOR shall continuously monitor the flow levels downstream and upstream of the bypass to detect any possible failure that may cause a sewage backup and/or spill. The CONTRACTOR shall include the means and methods of monitoring the flow in their Spill Response Plan.

9. The CONTRACTOR shall routinely inspect and maintain the bypass system, including the backup system. The CONTRACTOR shall submit as part of their bypass plans their maintenance procedures and frequency. The CONTRACTOR shall maintain a log of all pertinent inspection, maintenance and repair records in a manner acceptable to the ENGINEER and INSPECTOR.

10. All costs associated with sewer bypass requirements listed above (Section B-1 through 9) shall be included in the Bid Item “Sewer bypass system”.

C. Additional Insurance Requirements

1. The CONTRACTOR shall obtain and maintain an additional insurance coverage for Pollution Liability with limits and requirements set forth in Part III of the Proposal for Federal Funded projects, or Part IV of the Proposal for City funded projects. The limits and requirements for Pollution Liability shall be in an amount sufficient to cover potential losses from sudden and accidental pollution. All costs associated with the requirements for “Sewage Spill Prevention and Response Requirements”, including additional insurance, shall be included in the prices bid for other related bid items. However, CONTRACTORS will be required to submit, with their bid, a cost breakdown for the items required by the “Sewage Spill Prevention and Response Requirements”.

(END OF SECTION)

SECTION 01571
STORMWATER POLLUTION CONTROL
MEASURES FOR CONSTRUCTION ACTIVITIES

1.1 THE REQUIREMENT

A. General

1. The Contractor shall exercise every reasonable precaution to protect channels, storm drains, and bodies of water from pollution.

2. Conduct and schedule operations to minimize or avoid muddying and silting channels, drains, and waters.

3. As required, obtain permits for erosion and water pollution control from the appropriate jurisdictional agency before starting Work. All costs for work required for compliance with this Section shall be included within the Bid Prices.

.

4. Provide any necessary water pollution control devices to prevent, control, and abate water pollution, and implement good housekeeping pollution control measures to reduce the discharge of pollutants from work sites to the maximum extent practicable. These water pollution control devices include drains, gutters, slope protection blankets and retention basins and shall be constructed concurrently with other Work at the earliest practicable time.

5. Exercise care in preserving vegetation and protecting property, to avoid disturbing areas beyond the limits of the Work. Promptly repair any damage caused by Contractor operations.

6. Comply with the specific requirements based on acreage of disturbed soil.

7. Penalties: Failure to comply with this Section may result in significant fines and possible imprisonment. The RWQCB or other prosecuting authority may assess fines of up to $32,500 per day for each violation. Should the City be fined or penalized as a result of the Contractor failing to comply with this Section, the Contractor shall reimburse the City for any and all fines, penalties and related costs.

8. Notification and Report: If pollution occurs in the work area for any reason or when the Contractor becomes aware of any violation of this Section, correct the problem and immediately notify the Inspector. In addition, submit a written report to the Engineer within seven (7) calendar days describing the incident and the corrective actions taken. If either the Inspector or Engineer is first to observe pollution or a violation, the Contractor shall also explain in the written report why the Work was inadequately monitored.

9. The provisions of this Section describe minimum compliance and do not preclude other more stringent stormwater pollution control measures that may be required in the Contract.

B. Definition

1. Construction Activity: Includes clearing, grading, excavation, stockpiling, and reconstruction of existing facilities involving removal and replacement. Construction activity does not include routine maintenance such as, maintenance

of original line and grade, hydraulic capacity, or original purpose of the facility. If construction activity is part of a larger common plan of development, the amount of disturbed soil is the total land area of disturbed soil that results under the common plan.

C. Projects Having Less Than One Acre of Disturbed Soil

Projects with construction activity that will result in less than one acre of disturbed soil, the Contractor shall comply with the following minimum water quality protection requirements:

1. Retain eroded sediments and other pollutants on-site and do not allow transportation from the site by sheet flow, swales, area drains, natural drainage, or wind. Control slope and channel erosion by implementing an effective combination of best management practices (BMPs). Such BMPs include scheduling grading during non-rainy seasons, planting and maintaining vegetation on slopes and covering erosion-susceptible slopes.

2. Protect stockpiles of earth and other construction-related materials from being transported from the site by wind or water.

3. Properly store and handle fuels, oils, solvents, and other toxic materials to not contaminate the soil or surface waters, enter the groundwater, or be placed where they may enter a live stream, channel, drain, or other water conveyance facility. Protect all approved toxic storage containers from weather. Clean spills immediately and properly dispose of cleanup materials. Spills shall not be washed into live streams, channels, drains, or other water conveyance facilities.

4. Do not wash excess or waste concrete into the public way or any drainage system. Retain concrete wastes on-site until they can be appropriately disposed of or recycled.

5. Deposit trash and construction-related solid wastes in covered receptacles to prevent contamination of rainwater and dispersal by wind.

6. Do not allow sediments and other materials to be tracked from the site by vehicle traffic. Stabilize construction entrance roadways to inhibit sediments from being deposited onto public ways. Immediately sweep up accidental depositions. Do not allow depositions to be washed away by rain or by any other means.

7. Contain non-stormwater runoff from equipment or vehicle washing and any other activity at the work site.

8. At completion of the Work, clear the worksite of debris and restore to a condition at least equal to or better than prior to construction.

9. When construction activity with grading is likely to occur during the rainy season (October 15 through April 15), prepare a Wet Weather Erosion Control Plan (WWECP) per LAMC Section 61.02. The WWECP must be submitted to the Engineer for approval within thirty (30) calendar days after Notice to Proceed.

   Guidance on preparing the WWECP can be found in “Development Best Management Practices Handbook - Part A, Construction Activities”, adopted by the Board and as authorized by LAMC Section 64.72. The handbook can be viewed at or obtained at cost at Bureau of Engineering public counters.

10. When working in live streams, these are additional water pollution control requirements.

11. Erect barriers sufficient to prevent muddying or polluting streams.

12. Prior to removing materials from a flowing stream, use a stream bypass or other equivalent means to keep the flow in the stream free of the mud or silt from the removal operations.

13. Avoid transporting materials across live streams. If not possible, the transportation operation must be designed to prevent materials from falling into the stream and cannot muddy the stream.

14. Equipment may not be operated in a live stream or channel unless the Contractor can demonstrate to the Engineer's satisfaction that no other practical alternatives exist. The equipment must be designed to prevent materials from falling into the stream and cannot muddy the stream.

15. Do not allow fresh portland cement or fresh portland cement concrete to enter the water flowing in streams, channels or drains.

16. Do not allow material derived from the Work to be deposited in a live stream, channel or drain.

D. Projects Having One Acre or More of Disturbed Soil

Projects (including Linear Underground Projects) with construction activity that will result in one acre or more of disturbed soil, or less than one acre but part of a larger common plan of development, the Contractor shall comply with the requirements included in Section 1.1.C above, and the following requirements:

1. The Contractor shall comply with General Permit 2009-0009-DWQ for Discharges of Storm Water Associated with Construction Activities (General Permit). A copy of the General Permit may be downloaded from the California State Water Resources Control Board (SWRCB) website using the following link: http://www.waterboards.ca.gov/waterissues/programs/stormwater/construction.shtml.

2. The Contractor shall provide a Qualified Storm Water Pollution Prevention Plan (SWPPP) Developer (QSD) to prepare all Permit Registration Documents (PRDs), as defined in the General Permit. All PRDs must be uploaded to the SWRCB's General Permit web application called the Storm Water Multiple Application Report Tracking System (SMARTS) prior to commencement of construction activities. The SMARTS website link is: http://smarts.waterboards.ca.gov/smarts/faces/SwSmartsLogin.jsp. The PRDs include the Notice of Intent, Risk Assessment, Post-Construction Calculations, Site Map, SWPPP, and the first annual fee. The annual fee for this project is estimated to be calculated based on the estimated permit fee using the fee schedule on the SWRCB website which is based on the total disturbed area (in acres). The Contractor must submit the prepared SWPPP to the City for review and approval prior to uploading it to the SMARTS system. Upon City approval, the SWPPP shall be uploaded by the Contractor and certified by the City's Legally Responsible Person (LRP). At that time, the actual fee invoice will be provided by the City to the Contractor and the Contractor will submit payment to the State for the first annual fee. The Contractor is also responsible for all subsequent annual fees for this project.

3. This project has been determined to be a Risk Level (1, 2, or 3) shall be determined using the Risk Level analysis as per the General Permit. The Contractor shall comply with all visual monitoring, effluent water quality sampling, reporting, and record keeping requirements associated with this Risk Level, in accordance with the General Permit. For projects with Risk Level 2 or Risk Level 3, the Contractor must prepare and implement a Rain Event Action Plan, as described in the General Permit.

4. The Contractor shall provide a Qualified SWPPP Practitioner (QSP) to implement all SWPPP requirements at the project site and monitor the effectiveness of the SWPPP, in accordance with the General Permit.

5. The Contractor shall prepare the Annual Report required by the General Permit and submit it to the City for review and approval by August 1st of each year. The City's LRP will certify the Annual Report.

6. The Contractor shall provide and submit all reports and data necessary to complete the Notice of Termination at the Completion of the Work, in accordance with the General Permit.

(END OF SECTION)

SECTION 01572
CONSTRUCTION AND DEMOLITION WASTE MANAGEMENT

1.1 The Requirement

A. The Construction and Demolition (C&D) Waste Management Specification includes procedures for ensuring optimal diversion of construction and demolition waste generated by the project, and documentation procedures for tracking waste generation and diversion.

B. Each construction or demolition project shall reuse or recycle a minimum of 80% of the inert debris and 65% of the remaining construction and demolition waste generated by the project.

C. Each construction or demolition project shall dispose of construction and demolition waste generated from the project in accordance with the City's C&D Waste Recycling Ordinance (Ordinance No. 181519). Los Angeles Municipal Code requires that all mixed C&D waste generated within the City of Los Angeles be taken to a City Certified C&D Waste Processing Facility and all source separated C&D waste be taken to a recycling facility or City Certified C&D Waste Processing Facility. Further, C&D waste can only be legally collected, removed, or transported by City of Los Angeles Permitted Solid Waste Haulers. If the Contractor plans on collecting, removing, or transporting its own waste, it must first apply for and obtain a Solid Waste Hauler Permit from the Solid Resources Citywide Recycling Division (SRCRD) of the Bureau of Sanitation.

D. Failure to meet the C&D waste recycling requirements as detailed above will result in the assessment of penalties up to $5,000 per each load of mixed C&D waste not taken to City Certified C&D Waste Processing Facility. Further, collecting, removing or transporting C&D waste within the City without a valid Solid Waste Hauler Permit is a criminal misdemeanor subject to fines and/or imprisonment.

E. The project shall promote the City's sustainable building efforts by creating a resource-efficient and environmentally sensitive project and maintaining optimum control of the C&D waste generated during the project.

F. The project shall use products with post-consumer recycled content to the greatest extent feasible. Refer to the California Department of Resources Recycling and Recovery's website for information about recycled content construction products.

1.2 Abbreviations

A. C&D: Construction and Demolition
B. CalMAX: California Materials Exchange
C. CalRecycle: California Department of Resources Recycling and Recovery
D. CCR: California Code of Regulations
E. CDRG: Construction and Demolition Recycling Guide
F. LEA: Local Enforcement Agency
G. SWDD Report: Solid Waste Diversion and Disposal Report
H. WMP: Waste Management Plan

1.3 Definitions

A. "Certified C&D Waste Processing Facility" or "Certified C&D Waste Processor": A solid waste processing facility that accepts loads of C&D waste for the purpose of recovering re-usable and recyclable materials and disposing of the non-recyclable residual material. A Certified C&D Waste Processing Facility has been certified by the City of Los Angeles Bureau of Sanitation to have a facility specific recycling rate for C&D waste. For information on becoming a certified C&D waste processor, type in and search "waste hauler permit program" and then select the "waste hauler permit program" link at www.lacitysan.org. See the CDRG for information on the current list of certified processors and recycling facilities.

B. "Class III Landfill": A landfill that accepts non-hazardous solid waste such as household, commercial, and industrial solid waste. A Class III landfill is regulated by the LEA and must have a CalRecycle solid waste facilities permit.

C. "Construction and Demolition Recycling Guide": A publication by the Bureau of Sanitation's Solid Resources Citywide Recycling Division. The CDRG can be found by searching "waste hauler permit program" at www.lacitysan.org.

D. "C&D Waste" or "Mixed C&D Waste" or "C&D Debris or Mixed C&D Debris": Solid waste and recyclable materials, and building materials from construction, deconstruction, remodeling, repair, or demolition of buildings and other structures, do not contain hazardous waste (as defined in CCR Title 22, Section 66261.3, *et seq.*), and contain no more than one percent (1%) putrescible wastes by volume, calculated on a monthly basis. C&D waste includes, but is not limited to: asphalt, concrete, Portland cement, brick, lumber, drywall, roofing material, ceramic tile, pipe, glass, carpet and associated packaging.

E. "Deconstruction": The process of taking apart a structure with the primary goal of preserving the value of all useful building materials, so that they may be reused or recycled.

F. "Disposal": Acceptance of solid waste at a legally operating facility for the purpose of landfilling.

G. "Diversion": Activities that result in reducing the amount of solid waste disposed at a landfill. This can include source reduction activities, composting, recycling, and reuse.

H. "Inert Backfill Site": A location, other than inert fill or other disposal facility, to which inert debris is taken for the purpose of filling an excavation, shoring, or another soils engineering operation.

I. Inert Debris: Solid waste and recyclable materials that are source separated or separated for reuse and do not contain hazardous waste (as defined in CCR, Title 22, section 66261.3 et. seq.) or soluble pollutants at concentrations in excess of applicable water quality. Inert debris may not contain any putrescible wastes. Inert debris includes but is not limited to concrete, asphalt, crushed glass, fiberglass, asphalt or fiberglass roofing shingles, brick, slag, ceramics, plaster, clay, and clay products.

J. Inert Debris Engineered Fill Operation (IDEFO): An activity exceeding one year in duration in which only the following inert debris may be used: fully cured asphalt, uncontaminated concrete (including steel reinforcing rods embedded in the concrete), crushed glass, brick, ceramics, clay and clay products, which may be mixed with rock and soil. Those materials are spread on land in lifts and compacted under controlled conditions to achieve a uniform and dense mass which is capable of supporting structural loading, as necessary, or supporting other uses such as recreation, agriculture and open space in order to provide land that is appropriate for an end use consistent with approved local general and specific plans (e.g., roads, building sites, or other improvements) where an engineered fill is required to facilitate productive use(s) of the land.

K. "Non-Permitted Solid Waste Hauler": A company that does not possess a valid and current solid waste hauler permit from the City of Los Angeles to collect and transport solid waste from individuals or businesses in the City of Los Angeles.

L. "Permitted Solid Waste Hauler": A company that possesses a valid and current

solid waste hauler permit from the City of Los Angeles to collect and transport solid waste from individuals or businesses in the City of Los Angeles.

M. "Recycling": The process of collecting, sorting, cleansing, treating, and reconstituting materials that would otherwise become solid waste, and returning them to the economic mainstream in the form of raw material for new, reused, or reconstituted products that meet the quality standards necessary to be used in the marketplace.
   1. On-site Recycling: Materials that are sorted and processed for use in an altered form in the project, (e.g. concrete is crushed for use as base for a parking lot on the site)
   2. Off-site Recycling: Source-separated materials hauled to another location and used in an altered form in the manufacture of a new product.

N. "Recycling Facility": An operation that can legally accept materials for the purpose of processing the materials into an altered form for the manufacture of a new product. Depending on the types of materials accepted and operating procedures, a recycling facility may or may not be required to have a Solid Waste Facilities permit from CalRecycle or be regulated by the LEA.

O. "Reuse": Materials that are recovered for use in the same form. This includes materials that are reused on-site or off-site.

P. "Salvage": Materials recovered for reuse or sale or donation to a third party.

Q. "Source Reduction": Any action causing a net reduction in the generation of solid waste. Source reduction includes, but is not limited to, reducing the use of nonrecyclable materials, replacing disposable materials and products with reusable materials and products, reducing packaging, and reducing the amount of yard waste generated.

R. "Source-Separated Materials (Construction and Demolition Waste)": Material that is sorted at the site of generation by individual material type for the purpose of reuse or recycling, i.e., loads of concrete that are source-separated for delivery to an inert debris recycling facility to be crushed into road base material. Note: The Contractor may be able to save money on collection fees for source-separated material. Source-separated material is not subject to the City's 10% AB939 fee.

S. "Solid Waste": shall mean waste that CalRecycle has deemed acceptable for disposal at a Class III Landfill and shall not include source-separated material.

T. "Transfer Station": A facility that can legally accept solid waste for the purpose of temporarily storing the materials for re-loading onto other trucks and transporting them to a landfill for disposal or recovering some materials for reuse or recycling. Transfer stations must be permitted by CalRecycle and regulated by the LEA.

U. "Solid Waste Hauler" or "Waste Hauler": shall mean any Person engaged in the business of providing or responsible for the collection, removal or transportation or Solid Waste, Construction and Demolition Waste, Source-Separated Materials,

V. "Solid Waste Hauler Permit", "Waste Hauler Permit", or "AB 939 Compliance Permit": Persons who collect, remove or transport Solid Waste, including Construction and Demolition Waste, Source-Separated Materials or Co-Mingled Recyclables, generated within the City, must obtain, in addition to all other required permits, an AB 393 Compliance Permit from the Bureau of Sanitation.

1.4 DIVERSION REQUIREMENTS

A. The construction and demolition project shall reuse or recycle a minimum of 80% of the inert debris and 65% of the remaining construction and demolition waste generated by the project.

1.5 SUBMITTALS

A. Waste Management Plan (WMP): The Contractor shall conduct a site assessment and estimate the types and quantities of materials, generated during the project, that are anticipated for on-site or off-site processing, recycling, or reuse.

1. After the contract is awarded and prior to the commencement of the project, the City project manager will schedule and attend a meeting with the Contractor to discuss the Contractor's proposed WMP. This plan shall be submitted to allow the City and the Contractor an opportunity to develop a mutual understanding regarding the recycling and reuse requirements and programs.
2. Not more than 20 working days after the meeting, and before the commencement of the project, the Contractor shall prepare and submit to the City project manager a written WMP, Attachment A of this specification, and a copy of the contracted hauler's solid waste hauler permit. The plan shall show a minimum 80% recycling for inert debris expected from the project and 65% recycling for the remaining C&D waste expected from the project. The Contractor shall submit the plan in the format provided herein as Attachment A. Instructions for filling out the form are in Attachment A, -- INSTRUCTION SHEET. Work shall not begin until the project engineer approves the WMP for the project.
3. If the Contractor expects a circumstance that the Contractor believes make it infeasible to comply with the Diversion Requirement, the Contractor may submit a written request for an exemption at the time the WMP is submitted. If the exemption request is not approved by the Engineer, the Contractor shall revise and resubmit a WMP.
4. If the City determines that it is infeasible for the Contractor to meet the Diversion Requirement due to unique circumstances, the City shall determine the maximum feasible diversion rate for each material and shall indicate this rate on the WMP submitted by the Contractor. The City shall return a copy of the WMP to the Contractor marked "Approved for Infeasible Exemption". The Contractor will be required to meet the maximum feasible diversion rates as approved by the City. If the Contractor fails to meet the revised rates the Contractor will be subject to the stipulated penalties. Exempt projects are required to keep and submit all documentation for the project. This includes receipts, the WMP, SWDD Reports, and all supporting documentation as required herein.
5. The City's approval of the Contractor's WMP will not otherwise relieve the Contractor of responsibility for adequate and continuing control of pollutants and other environmental protection measures.

B. Solid Waste Diversion and Disposal Report (SWDD Report): With each submittal of the Contractor's application for progress payment, the Contractor shall prepare and submit to the project inspector a written SWDD Report quantifying all material generated, diverted, and disposed in the project during the time period covered by the SWDD Report and progress payment. Part 3 of each SWDD Report is a cumulative history of the diversion and disposal for the project. The Contractor shall submit the report in the format provided herein as shown in Attachment B. Failure to submit the report and the supporting documentation shall render the application for progress payment incomplete and delay payment until the proper documentation is submitted. The supporting documentation includes manifests, weight tickets, receipts, reports, invoices, and other supporting documents specifically identifying the projects, the recyclables and solid waste generated by the project, and where the material was sent. Instructions for filling out the forms are in Attachment B – INSTRUCTION SHEET. Together, all of the SWDD Reports should cover the complete time period of the project. The final SWDD Report and supporting documentation must be submitted within 30 days of the end of the project.

C. Substitutions: Should the Contractor desire to use materials, equipment, or products that meet the requirements of these specifications but are more environmentally responsive, the Contractor shall submit these substitutions in accordance with “Substitutions and “Or Equal” Submittals” of the General Requirements.

1.6 PENALTY

A. If the diversion requirement has not been met, a per ton penalty will be applied to the disposed material over that allowed in the approved WMP.
B. The penalty will be calculated as follows: Tons over that allowed in the approved WMP times the per-ton penalty in effect at the time the contract was awarded. The penalty may not exceed the total payment retention for the project.
C. Tons of mixed C&D waste either not hauled to City Certified C&D Waste Processing Facilities or hauled by non-permitted waste hauler(s) will be assessed a per-ton penalty. The penalty may not exceed the total payment retention for the project.
D. The penalty is $100 per ton.
E. The recommended penalty will be determined by the Bureau of Contract Administration and Bureau of Sanitation and shall be considered by the Board of Public Works at the time of the project closeout.

1.7 REUSE, SALVAGE, AND RECYCLING OPTIONS

A. Construction projects shall make use of as many reuse and salvage options as is feasible. One option is the California Materials Exchange (CalMAX), a free program sponsored by CalRecycle. The most recent issue of CDRG, contains contact information for non-profit organizations, salvage facilities, and other reuse organizations.
B. Recycling shall include both on-site and off-site recycling of source-separated materials, as well as mixed C&D waste recycling efforts.
C. On-site recycling programs shall produce a quality product to meet the specifications identified in the contract documents, subject to approval. The Contractor shall estimate the amount of material to be used in the project and include a program for off-site recycling of any excess material that cannot be used in the project.
D. The Contractor shall develop and implement a program to include source separation of solid waste, to the greatest extent feasible, of the following types:
    1. Asphalt
    2. Concrete, concrete block, slump stone (decorative concrete block)
    3. Rock
    4. Wood (lumber)
    5. Green material (i.e. tree trimmings)
    6. Other materials, as appropriate, such as red clay brick, building fixtures, architectural details, dry wall, carpet, carpet padding, and corrugated cardboard
E. Mixed C&D Waste Recycling: The Contractor must develop and implement a program to transport all commingled construction and demolition materials that cannot be feasibly source-separated to a Certified C&D Waste Processing Facility.
F. Certified C&D Waste Processing Facility: These facilities have facility recycling rates, established by the City of Los Angeles for mixed C&D waste. Mixed C&D waste taken to these facilities are considered to have been recycled at the rate of the certified processing facility. For example, 100 tons of material taken to a facility with an 80% recycling rate results in 80 tons of recycling and 20 tons of disposal for the project A list of these facilities and their recycling rates is in the

most recent issue of CDRG.

G. Recycling, Reuse, Mixed C&D Waste Processing, and Salvage Facilities: The CDRG is incorporated herein by reference and contains information about processing, recycling, reuse, and salvage facilities.

H. Revenue: Revenue or savings obtained from recycled, reused, or salvaged materials shall accrue to the Contractor unless otherwise noted in the Contract Documents. Note: The Contractor may be able to save money on collection fees for source-separated material. Source-separated material is not subject to the City's 10% AB939 fee.

I. AB 939 Fee: The AB 939 fee is assessed on all solid waste hauled within the City of Los Angeles in accordance with Section 66.32 of the Los Angeles Municipal Code.

1. All solid waste haulers hauling material from City of Los Angeles locations must be permitted in accordance with Section 66.32 of the Los Angeles Municipal Code.
2. Source-separated material is not assessed this fee.

1.8 HAULING AND DISPOSAL OPERATIONS

A. Hauling: The Contractor is responsible for arranging the collection and hauling of C&D waste by a solid waste hauler that is permitted by the City of Los Angeles in accordance with Section 66.32 of the Los Angeles Municipal Code.

B. Recycling and Processing Facilities: The Contractor shall be responsible for transporting C&D waste to recycling or processing facilities. The Contractor shall be familiar with the requirements for acceptance of C&D waste at the recycling and processing facilities before the material is delivered. The most recent issue of CDRG includes a partial list of these facilities. Always call facilities in advance.

C. Disposal Facilities: The Contractor shall be responsible for transporting C&D waste that cannot be accepted at a recycling or processing facility, to a transfer station or disposal facility that can legally accept the materials for the purpose of disposal. A load of C&D waste may be taken to a disposal facility only after it has been rejected by 2 different certified processing facilities and the driver is in possession of both rejection slips. The rejection slips and the weight ticket from the final destination must be kept together and submitted to the contractor.

D. Site Disposal: The Contractor may not burn, bury, or otherwise dispose of solid waste on the project job-site.

END OF SECTION

ATTACHMENT A - INSTRUCTION SHEET FOR WASTE MANAGEMENT PLAN

1. For assistance, contact the Solid Resources Citywide Recycling Division of LA Sanitation & Environment at (213) 485-3460 or sansrcrd_cdrecycling@lacity.org.
2. Please print very clearly or type.
3. Waste Management Plan (WMP) is to be completed and approved prior to start of construction. Along with the WMP, the Contractor is to include a copy of the waste hauler's waste hauler permit.
4. Attachment A includes**:** **Part 1-**Inert Debris and **Part 2**-Metal, Wood, C&D waste, and all other materials.
5. Must meet ≥80% recycling rate in **Part 1** – Inert Debris such as concrete, asphalt, dirt, rock, and brick.
6. Must meet ≥65% recycling rate in **Part 2** – Metal, wood, green waste, C&D waste, and all other materials.
7. The information required includes but is not limited to, the following:
   a. Contractor and project work order number.
   b. Permitted solid waste hauler(s) and permit number(s).
   c. Facility names and addresses that are to process the C&D materials.
   d. Estimated quantities of **all** C&D materials listed in **tons**.
   e. Verify whether the Waste Management Plan meets the minimum recycling requirement of 80% for inert debris in Part 1. Verify whether the Waste Management Plan meets the minimum recycling requirement of and 65% for other C&D waste.
8. **Calculating recycling and disposal for mixed C&D waste taken to a certified processing facility: the total tons taken to certified processing facility times the recycling rate = amount to be recycled. Total tons taken to facility minus amount to be recycled = amount for disposal. E.g. 100 tons x 0.80 (80% recycling rate) = 80 tons diverted and 20 tons disposed.

ATTACHMENT A

WASTE MANAGEMENT PLAN (PART 1-INERT DEBRIS)

Project Title:	W. O. Number:	Date Submitted:
Name & Title of Responsible Person:	Signature:	

Permitted Waste Hauler Name(s) and Permit No(s):

Material	Facility Name and Address	Tons Diverted	Tons Disposed
RECYCLING/REUSE			
Asphalt			
Concrete			
Brick			
Dirt			
Mixed Inerts			
Other (Describe)			
Other (Describe)			
DISPOSAL			
Other (Describe)			
Other (Describe)			
Other (Describe)			
DIVERSION AND DISPOSAL TOTALS =			

Percent Recycling = $\frac{\text{Total diversion}}{\text{Total diversion + Total disposed}}$ X 100 =

Percent Recycling = $\frac{\quad}{+}$ X 100 = %

Does Part 1 (Inert Debris) of this Waste Management Plan meet the minimum recycling requirement of 80% for Inert Debris?

YES ☐ NO ☐

ATTACHMENT A

WASTE MANAGEMENT PLAN (PART 2-ALL OTHER C&D WASTE)

W. O. No.:	Date Submitted:

Contractors Name:

Street address:

City, State, Zip:

Phone: Fax: Email:

Permitted Waste Hauler Name(s) and Permit No(s):

Material	Facility Name and Address	Tons Diverted	Tons Disposed
RECYCLING/REUSE			
Glass			
Wood/Greenwaste			
Metal			
Cardboard			
Other (Describe)			
DISPOSAL			
Other (Describe)			
Other (Describe)			
CERTIFIED PROCESSING**			
Mixed C&D Waste			
Mixed C&D Waste			
DIVERSION AND DISPOSAL TOTALS =			

$$\text{Percent Recycling} = \frac{\text{Total Diversion}}{\text{Total Diversion} + \text{Total Disposed}} \times 100 =$$

$$\text{Percent Recycling} = \frac{\qquad}{+} \times 100 = \quad \%$$

Does Part 2 (All Other C&D Waste) of this Waste Management Plan meet the minimum recycling requirement of 65% for all other C&D Waste? YES ☐ NO ☐

****Recycling tonnages for mixed C&D waste taken to a certified processing facility = total tonnage x recycling rate. Remaining tonnage counts as disposal. Example: 200 tons x 0.80 = 160 tons diverted and 40 tons disposed.**

EXAMPLE WASTE MANAGEMENT PLAN
ATTACHMENT A
WASTE MANAGEMENT PLAN (PART 1-INERT DEBRIS)

Project Title: *Big Street Overcrossing*	W. O. Number: *XYZ12345*	Date Submitted: *01/01/2020*
Name & Title of Responsible Person: *Bobby Lee, Project Manager*	Signature: *Bobby Lee*	

Permitted Waste Hauler Name(s) and Permit No(s): *Grava Gravel Haulers, PER-22-333*

Material	Facility Name and Address	Tons Diverted	Tons Disposed
RECYCLING/REUSE			
Asphalt	*Inert Recycling Facility A,888 Valle Valley, CA 12345*	*600*	
Concrete	*Inert Recycling Facility A,888 Valle Valley, CA 12345*	*55*	
Brick	*Inert Recycling Facility B, 777 Valle Valley,CA 12345*	*6*	
Dirt	*The Landscaping Co., 222 Valle Valley, CA 12345*	*200*	
Mixed Inerts			
Other (Describe)			
Other (Describe)			
DISPOSAL			
Other (Describe)			
Other (Describe)			
Other (Describe)			
	DIVERSION AND DISPOSAL TOTALS =	*861*	

$$\text{Percent Recycling} = \frac{\text{Total diversion}}{\text{Total diversion} + \text{Total disposed}} \times 100 =$$

$$\text{Percent Recycling} = \frac{861}{861 + 0} \times 100 = 100.00\ \%$$

Does Part 1 (Inert Debris) of this Waste Management Plan meet the minimum recycling requirement of 80% for Inert Debris?

YES ☒ NO ☐

ATTACHMENT A

WASTE MANAGEMENT PLAN (PART 2-ALL OTHER C&D WASTE)

W. O. No.: XYZ12345	Date Submitted: 01/01/2020

Contractors Name: Awesome Engineering Contractors

Street address: Circular Drive

City, State, Zip: *Ciudad City, CA 12345*

Phone: (123) 456-7891 Fax: (321) 123-4567 Email: AEC@zmail.com

Permitted Waste Hauler Name(s) and Permit No(s):

Material	Facility Name and Address	Tons Diverted	Tons Disposed
RECYCLING/REUSE			
Glass			
Wood/Greenwaste	*The Landscaping Co., 222 Valle Valley, CA 12345*	*50*	
Metal	*Kim Loai Metal Recycling, 333 Camino St, CA 12345*	*6*	
Cardboard			
Other (Describe)			
DISPOSAL			
Other (Describe)	*Municipal Landfill, 456 Montana Mountains, CA 12345*		*15*
Other (Describe)			
CERTIFIED PROCESSING**			
Mixed C&D Waste	*Certified Processor A (Recycling Rate = 75% = 0.75)*	*18.75*	*6.25*
Mixed C&D Waste	*25 tons x 0.75 = 18.75 tons recycled and 6.25 tons disposed*		
	DIVERSION AND DISPOSAL TOTALS =	*74.75*	*21.25*

$$\text{Percent Recycling} = \frac{\text{Total Diversion}}{\text{Total Diversion} + \text{Total Disposed}} \times 100 =$$

$$\text{Percent Recycling} = \frac{74.75}{74.75 + 21.25} \times 100 = 77.86\ \%$$

Does Part 2 (All Other C&D Waste) of this Waste Management Plan meet the minimum recycling requirement of 65% for all other C&D Waste? YES ☒ NO ☐

****Recycling tonnages for mixed C&D waste taken to a certified processing facility = total tonnage x recycling rate. Remaining tonnage counts as disposal. Example: 200 tons x 0.80 = 160 tons diverted and 40 tons disposed.**

ATTACHMENT B - INSTRUCTION SHEET FOR SOLID WASTE DIVERSION & DISPOSAL REPORT

1. For assistance, contact the Solid Resources Citywide Recycling Division of LA Sanitation & Environment at (213) 485-3460 or sansrcrd_cdrecycling@lacity.org.
2. Please print very clearly or type.
3. All **three (3) pages** of Attachment B and **all** manifests, weight tickets, receipts, reports, invoices, and other supporting documents specifically identifying the projects, the recyclables and solid waste generated by the project, and where the material was sent must be submitted to the inspector with each application for progress payment.
4. Attachment B includes**: Part 1** - Inert Debris, **Part 2** - All Other C&D Waste, **Part 3** - Project Cumulative Total.
5. Must meet ≥80% recycling rate for Inert Debris by end of construction.
6. Must meet ≥65% recycling rate in Metal, wood, green waste, C&D waste, and all other materials by end of construction.
7. In **Part 1 and Part 2,** record:
   a. Material type generated.
   b. Permitted solid waste hauler(s) and permit number(s).
   c. Facility names and addresses where materials were delivered.
   d. Tons diverted/disposed for a particular pay period.
   e. Verify whether Part 1 meets the minimum recycling requirement of 80% for Inert Debris. Verify whether Part 2 meets the minimum recycling requirement of 65% for other C&D Waste. Contractor is to meet the minimum recycling requirements by the end of construction.
8. In **Part 3**, record:
   a. Pay period beginning and period ending
   b. Diversion and disposal for the pay period and cumulative diversion and disposal for the project
   c. Cumulative waste generated (diversion + disposal) for the project
   d. Cumulative recycling rate for the project (diverted/generated)*100
9. The information required includes but is not limited to, the following:
   a. Contractor and project identification information
   b. Actual quantities of **all** materials listed in tons
10. Source-separated material taken to a recycling facility or certified processing facility is 100% recycled.
11. **Calculating recycling and disposal for mixed material taken to a certified processing facility: the total tons taken to certified processing facility times the recycling rate = amount to be recycled. Total taken to facility minus amount to be recycled = amount for disposal. E.g. 100 tons x 0.80 (80% recycling rate) = 80 tons diverted and 20 tons disposed.

SOLID WASTE DIVERSION AND DISPOSAL REPORT
PART 1 OF 3 - INERT DEBRIS

Project Title:	W. O. Number:	Date Submitted:	Progress Payment #
Company Name:	Daytime Phone Number:		
Period Covered In This Report: From:	To:		
Permitted Waste Hauler Name(s) and Permit No(s):			

Material	Facility Name and Address	Tons diverted	Tons Disposed
RECYCLING/REUSE			
Asphalt			
Concrete			
Brick			
Dirt			
Mixed Inerts			
Other (Describe)			
Other (Describe)			
DISPOSAL			
Other (Describe)			
Other (Describe)			
Other (Describe)			
DIVERSION AND DISPOSAL TOTALS * =			

***Copy the Tons Diverted and Tons Disposed totals to Part 3 Project Cumulative Total. Each Report needs to have the totals from every previous Diversion and Disposal Report documented on it, as well as the totals from this Report.**

ATTACHMENT B

SOLID WASTE DIVERSION AND DISPOSAL REPORT

PART 2 OF 3 - ALL OTHER C&D WASTE

W. O. Number:	Date Submitted:

Permitted Waste Hauler Name(s) and Permit No(s):

Material	Facility Name and Address	Tons Recycled	Tons Disposed
RECYCLING/REUSE			
Metal			
Wood / Lumber			
Greenwaste / Landscaping			
Glass			
Cardboard			
Other (Describe)			
Other (Describe)			
DISPOSAL			
Mixed Solid Waste			
Other (Describe)			
Other (Describe)			
CERTIFIED PROCESSING**			
Mixed C&D Waste			
Mixed C&D Waste			
Mixed C&D Waste			
DIVERSION AND DISPOSAL TOTALS*	**=**		

***Copy the Tons Diverted and Tons Disposed totals to Part 3 Project Cumulative Total. Each Report needs to have the totals from every previous Diversion and Disposal Report documented on it, as well as the totals from this Report.**

****Recycling tonnages for mixed C&D waste taken to a certified facility = total tonnage x recycling rate. Remaining tonnage counts as disposal. Example: 200 tons x 0.80 = 160 tons diverted and 40 tons disposed.**

ATTACHMENT B

SOLID WASTE DIVERSION AND DISPOSAL REPORT

PART 3 OF 3 - PROJECT CUMULATIVE TOTAL

W. O. Number:				Date Submitted:			
Period Beginning	Period Ending	*Period Diversion	Cumulative Project Diversion, **R**	*Period Disposal	Cumulative Project Disposal, **D**	Cumulative Waste **G**enerated **R + D**	Cumulative Recycling % (**R**/**G**)100
INERT DEBRIS CUMULATIVE PROJECT HISTORY, REFER TO ATTACHMENT B PART 1 OF 3							
ALL OTHER C&D WASTE CUMULATIVE PROJECT HISTORY, REFER TO ATTACHMENT B PART 2 OF 3							

Does this Report meet the minimum recycling requirement of 80% for Inert Debris and 65% for All Other C&D Waste? Contractor is to meet the minimum recycling requirements of 80% for Inert Debris and 65% for All Other C&D Waste by the end of construction.

YES ☐ NO ☐

Name & title of person responsible for the information in this form:	Signature:

***From appropriate Part 1 or 2 during each period.**
Each Attachment B Part III Report needs to have the Tons Diverted and Tons Disposed from every previous Diversion and Disposal Report documented in it, as well as the totals from this Report. Attach another Part III form and continue information if more rows are needed.

EXAMPLE SOLID WASTE DIVERSION AND DISPOSAL REPORT FOR PROGRESS PAYMENT #1

ATTACHMENT B

SOLID WASTE DIVERSION AND DISPOSAL REPORT
PART 1 OF 3 - INERT DEBRIS

Project Title: *Big Street Overcrossing*	W. O. Number: *XYZ12345*	Date Submitted: *03/15/2020*	Progress Payment # *1*

Company Name: *Awesome Engineering Contractors* Daytime Phone Number: *(123)456-7891*

Period Covered In This Report:
From: *2/1/2020* To: *2/28/2020*

Permitted Waste Hauler Name(s) and Permit No(s): *Grava Gravel Haulers, PER-22-333*

Material	Facility Name and Address	Tons diverted	Tons Disposed
RECYCLING/REUSE			
Asphalt	*Inert Recycling Facility A,888 Valle Valley, CA 12345*	*45*	
Concrete	*Inert Recycling Facility A,888 Valle Valley, CA 12345*	*10*	
Brick	*Inert Recycling Facility B, 777 Valle Valley, CA 12345*	*6*	
Dirt	*The Landscaping Co., 222 Valle Valley, CA 12345*	*150*	
Mixed Inerts			
Other (Describe)			
Other (Describe)			
DISPOSAL			
Other (Describe)			
Other (Describe)			
Other (Describe)			
DIVERSION AND DISPOSAL TOTALS * =		*211*	

***Copy the Tons Diverted and Tons Disposed totals to Part 3 Project Cumulative Total. Each Report needs to have the totals from every previous Diversion and Disposal Report documented on it, as well as the totals from this Report.**

ATTACHMENT B

SOLID WASTE DIVERSION AND DISPOSAL REPORT

PART 2 OF 3 - ALL OTHER C&D WASTE

W. O. Number: *XYZ12345*	Date Submitted: *03/15/2020*

Permitted Waste Hauler Name(s) and Permit No(s): *Grava Gravel Haulers, PER-22-333*

Material	Facility Name and Address	Tons Recycled	Tons Disposed
RECYCLING/REUSE			
Metal	*Kim Loai Metal Recycling, 333 Camino St, CA 12345*	*2*	
Wood / Lumber	*The Landscaping Co., 222 Valle Valley, CA 12345*	*15*	
Greenwaste / Landscaping			
Glass			
Cardboard			
Other (Describe)			
Other (Describe)			
DISPOSAL			
Mixed Solid Waste	*Municipal Landfill, 456 Montana Mountains, CA 12345*		*1*
Other (Describe)			
Other (Describe)			
CERTIFIED PROCESSING**			
Mixed C&D Waste	*Certified Facility A (Recycling Rate = 75% = 0.75)*	*9*	*3*
Mixed C&D Waste	*12 tons x 0.75 = 9.00 tons recycled and 3.00 tons disposed*		
Mixed C&D Waste			
Mixed C&D Waste			
DIVERSION AND DISPOSAL TOTALS* =		*26*	*4*

***Copy the Tons Diverted and Tons Disposed totals to Part 3 Project Cumulative Total. Each Report needs to have the totals from every previous Diversion and Disposal Report documented on it, as well as the totals from this Report.**

****Recycling tonnages for mixed C&D waste taken to a certified facility = total tonnage x recycling rate. Remaining tonnage counts as disposal. Example: 200 tons x 0.80 = 160 tons diverted and 40 tons disposed.**

ATTACHMENT B

INERT SOLID WASTE DIVERSION AND DISPOSAL REPORT

PART 3 OF 3 - PROJECT CUMULATIVE TOTAL

W. O. Number: *XYZ12345*	Date Submitted: *03/15/2020*

Period Beginning	Period Ending	*Period Diversion	Cumulative Project Diversion, **R**	*Period Disposal	Cumulative Project Disposal, **D**	Cumulative Waste **G**enerated **R + D**	Cumulative Recycling % (**R**/**G**)100
INERT DEBRIS CUMULATIVE PROJECT HISTORY, REFER TO ATTACHMENT B PART 1 OF 3							
2/1/2020	*2/28/2020*	*211*	*211*	*0*	*0*	*211*	*100(211/211)= 100.00*
ALL C&D OTHER WASTE CUMULATIVE PROJECT HISTORY, REFER TO ATTACHMENT B PART 2 OF 3							
2/1/2020	*2/28/2020*	*26*	*26*	*4*	*4*	*26+4=30*	*100(26/30)= 86.67*

Does this Report meet the minimum recycling requirement of 80% for Inert Debris and 65% for All Other C&D Waste? Contractor is to meet the minimum recycling requirements of 80% for Inert Debris and 65% for All Other C&D Waste by the end of construction.

YES ☒ NO ☐

Name & title of person responsible for the information in this form: *Bobby Lee, Project Manager*	Signature: *Bobby Lee*

***From appropriate Part 1 or 2 during each period.**
Each Attachment B Part III Report needs to have the Tons Diverted and Tons Disposed from every previous Diversion and Disposal Report documented in it, as well as the totals from this Report.
Attach another Part III form and continue information if more rows are needed.

EXAMPLE SOLID WASTE DIVERSION AND DISPOSAL REPORT FOR PROGRESS PAYMENT #2

ATTACHMENT B

SOLID WASTE DIVERSION AND DISPOSAL REPORT

PART 1 OF 3 - INERT DEBRIS

Project Title: *Big Street Overcrossing*	W. O. Number: *XYZ12345*	Date Submitted: *04/15/2020*	Progress Payment # *2*

Company Name: *Awesome Engineering Contractors* Daytime Phone Number*: (123)456-7891*

Period Covered In This Report:

From: *3/1/2020* To: *3/31/2020*

Permitted Waste Hauler Name(s) and Permit No(s): *Grava Gravel Haulers, PER-22-333*

Material	Facility and Location	Tons diverted	Tons Disposed
RECYCLING/REUSE			
Asphalt	*Inert Recycling Facility A,888 Valle Valley, CA 12345*		
Concrete	*Inert Recycling Facility A,888 Valle Valley, CA 12345*	*300*	
Brick	*Inert Recycling Facility B, 777 Valle Valley, CA 12345*		
Dirt	*The Landscaping Co., 222 Valle Valley, CA 12345*	*100*	
Other (Describe)			
Other (Describe)			
DISPOSAL			
Other (Describe)			
Other (Describe)			
Other (Describe)			
DIVERSION AND DISPOSAL TOTALS * =		*400*	

***Copy the Tons Diverted and Tons Disposed totals to Part 3 Project Cumulative Total. Each Report needs to have the totals from every previous Diversion and Disposal Report documented on it, as well as the totals from this Report.**

ATTACHMENT B

SOLID WASTE DIVERSION AND DISPOSAL REPORT

PART 2 OF 3 - ALL OTHER C&D WASTE

W. O. Number: *XYZ12345*	Date Submitted: *04/15/2020*

Permitted Waste Hauler Name(s) and Permit No(s): *Grava Gravel Haulers, PER-22-333*

Material	Facility and Location	Tons Recycled	Tons Disposed
RECYCLING/REUSE			
Metal	*Kim Loai Metal Recycling, 333 Camino St, CA 12345*	*1*	
Wood / Lumber	*The Landscaping Co., 222 Valle Valley, CA 12345*	*16*	
Greenwaste / Landscaping			
Glass			
Cardboard			
Other (Describe)			
Other (Describe)			
DISPOSAL			
Mixed Solid Waste	*Municipal Landfill, 456 Montana Mountains, CA 12345*		*1*
Other (Describe)			
Other (Describe)			
Other (Describe)			
CERTIFIED PROCESSING**			
Mixed C&D Waste	*Certified Processor A (Recycling Rate = 75% = 0.75)*	*7.5*	*3.5*
Mixed C&D Waste	*10 tons x 0.75 = 7.5 tons recycled and 2.5 tons disposed*		
Mixed C&D Waste			
Mixed C&D Waste			
DIVERSION AND DISPOSAL TOTALS* =		*24.5*	*4.5*

***Copy the Tons Diverted and Tons Disposed totals to Part 3 Project Cumulative Total. Each Report needs to have the totals from every previous Diversion and Disposal Report documented on it, as well as the totals from this Report.**

****Recycling tonnages for mixed C&D waste taken to a certified facility = total tonnage x recycling rate. Remaining tonnage counts as disposal. Example: 200 tons x 0.80 = 160 tons diverted and 40 tons disposed.**

ATTACHMENT B

INERT SOLID WASTE DIVERSION AND DISPOSAL REPORT

PART 3 OF 3 - PROJECT CUMULATIVE TOTAL

W. O. Number: *XYZ12345*	Date Submitted: *04/15/2020*

Period Beginning	Period Ending	*Period Diversion	Cumulative Project Diversion, **R**	*Period Disposal	Cumulative Project Disposal, **D**	Cumulative Waste **G**enerated **R + D**	Cumulative Recycling % (**R**/**G**)100
INERT DEBRIS CUMULATIVE PROJECT HISTORY, REFER TO ATTACHMENT B PART 1 OF 3							
2/1/2020	*2/28/2020*	*211*	*211*	*0*	*0*	*211*	*100(211/211)= 100.00*
3/1/2020	*3/31/2020*	*400*	*211+400=611*	*0*	*0*	*211+400=611*	*100(611/611)= 100.00*
ALL OTHER C&D WASTE CUMULATIVE PROJECT HISTORY, REFER TO ATTACHMENT B PART 2 OF 3							
2/1/2020	*2/28/2020*	*26*	*26*	*4*	*4*	*26+4=30*	*100(26/30)= 86.67*
3/1/2020	*3/31/2020*	*24.5*	*26+24.5=50.5*	*4.5*	*4+4.5=8.5*	*50.5+8.5=59*	*100(50.5/59)= 85.59*

Does this Report meet the minimum recycling requirement of 80% for Inert Debris and 65% for All Other C&D Waste? Contractor is to meet the minimum recycling requirements of 80% for Inert Debris and 65% for All Other C&D Waste by the end of construction.

YES ☒ NO ☐

Name & title of person responsible for the information in this form: *Bobby Lee, Project Manager*	Signature: *Bobby Lee*

***From appropriate Part I or II during each period.**
Each Attachment B Part III Report needs to have the Tons Diverted and Tons Disposed from every previous Diversion and Disposal Report documented in it, as well as the totals from this Report.
Attach another Part III form and continue information if more rows are needed.

SECTION 01573
EXCAVATION SHORING, FORMS, AND FALSEWORK

1.1 THE REQUIREMENT

A. The CONTRACTOR shall have at the Worksite, copies or suitable extracts of: Construction Safety Orders, Tunnel Safety Orders and General Industry Safety Orders issued by the State Division of Industrial Safety. The CONTRACTOR shall comply with provisions of these and all other applicable laws, ordinances, and regulations.

B. Before excavating any trench 1.5m (5 feet) or more in depth, the CONTRACTOR shall submit a detailed plan to the CITY showing the design of shoring, bracing, sloping, or other revisions to be made for the Workers' protection from the hazard of caving ground during the excavation of such trench. The plan and calculations shall be prepared by a California registered Civil or Structural ENGINEER. No excavation shall start until the ENGINEER has accepted the plan and the CONTRACTOR has obtained a permit from the State Division of Industrial Safety. A copy of the permit shall be submitted to the ENGINEER.

C. The INSPECTOR will provide a competent person trench/excavation certification form to the CONTRACTOR. It shall be completely filled out before any worker has access to trench or excavation and returned to the INSPECTOR before the end of the first working day. The CONTRACTOR shall certify by this form the name of the competent person administering the Work, the soil classification, and the type of excavation protective system provided and/or installed.

D. The CONTRACTOR shall completely fence all excavations to provided protection against anyone falling into the excavation and to the satisfaction of the INSPECTOR. The fencing shall be in place at all times except when workers are present and actual construction operations are in progress.

E. The fencing material shall be chain link fabric or welded wire fabric (6x6-W9xW9 minimum) and 1.5 m (5 feet) high, constructed according to one of the following:

1. Tensioned fencing material and have top and bottom tension wires securely fastened to driven steel posts or other equally rigid elements at a maximum spacing of 3.6m (12 feet); or

2. Untensioned fencing materials securely fastened to extended trench shoring elements at a maximum spacing of 2.4m (8 feet) and fastened to continuous top and bottom rails constructed of nominal 50mm x 100mm (2 in x 4 in) lumber or equally rigid material. Framed panels with suitable supporting elements fastened together to form a continuous fence may also be used.

F. Payment for performing all Work necessary to provide safety measures shall be included in the prices bid for other items of work except where separate bid items for excavation safety are provided, or required by law.

(END OF SECTION)

SECTION 01581
PROJECT SIGNS

1.1 THE REQUIREMENT

A. The names, addresses and specialties of CONTRACTORS, Subcontractors, architects, or engineers may be displayed on removable signs. The size and location shall be subject to the ENGINEER'S approval. Commercial advertising matter shall not be attached to or painted on the surfaces of buildings, fences, canopies, or barricades.

B. TIME and INFORMATION type construction notice signs 2 each per Standard Plan S-791-1 are required. The Inspector will determine appropriate location(s). The time for the TIME sign and the telephone number for the INFORMATION sign will be furnished by the ENGINEER at the time of construction.

C. TYPE I CREDIT signs 2 each per Standard Plan S-791-1 are required. The INSPECTOR will determine the appropriate location(s). The information for the sign will be furnished by the ENGINEER at the time of construction.]

D. C-18 and C-13 ADVANCE CONSTRUCTION NOTICE SIGNS per Standard Plan S-791-1 are required. The INSPECTOR will determine the appropriate locations.

(END OF SECTION)

SECTION 01601
BUY CLEAN CALIFORNIA ACT

THE REQUIREMENT

A. For projects that include eligible materials as defined in this section, CONTRACTOR shall provide current Environmental Product Declarations (EPDs) of eligible materials after project award and meet the State of California maximum limits for Global Warming Potential (GWP) as listed by the State's Department of General Services, if/when made available. Additional information regarding GWP limits may be found at the following website:
https://www.dgs.ca.gov/PD/Resources/Page-Content/Procurement-Division-Resources-List-Folder/Buy-Clean-California-Act

B. Eligible Materials:
   1. Materials/products Requiring Facility-Specific EPDs:
      a. Steel: This includes structural steel (hot-rolled sections, hollow structural sections, and plates) and carbon steel reinforcement used in concrete or masonry.
   2. Materials/products Requirinf Industry-Average or Facility-Specific EPDs:
      a. Flat glass
      b. Mineral wool board insulation
      c. Concrete

C. A submitted facility-specific or industry-average Environmental Product Declaration (EPD) must be a current Type III as defined by the International Organization for Standardization (ISO) Standard 14025, and has been 3rd Party verified following applicable Product Category Rules (PCRs). Credentials of 3rd Party showing them to be subject matter experts must be provided by the CONTRACTOR upon request. Minimum stage of coverage for EPDs shall consist of the production life cycle (i.e. product stage) or "cradle to gate". PCR shall be as identified by California Department of General Services for the Buy Clean California Act (BCCA). For concrete, PCR shall be ISO 21930:[2017]

D. The required EPDs shall be provided with the submittal of each eligible material used in this contract. See project-specific technical specifications, when applicable, for additional information. Depending on the number of facilities, and product types being proposed by the Contractor, more than one eligible material submittal of the same type may be required. Once approved, the CONTRACTOR must also provide a copy of the approved EPDs with the payment request to the INSPECTOR.

E. Restrictions:
   1. The CONTRACTOR shall not install any eligible materials or incorporate into the work in any way until the associated submittal with the required EPDs have been provided and approved, unless otherwise agreed upon by the ENGINEER. Payment for specific eligible material will be withheld until the EPDs for these materials are approved by the ENGINEER and submitted along with the progress payment requests.
   2. The CONTRACTOR may be assessed liquidated damages for failure to complete the project within the time fixed by the terms of the contract resulting from Contractor delays associated with submission and approval of the required EPDs.

(END OF SECTION)

SECTION 01611
GUARANTY / WARRANTY

1.1 THE REQUIREMENT

A. The CONTRACTOR shall and does hereby warrant and guaranty that all work executed under this Contract will be free from defects of materials and workmanship for a period of one (1) year from the date of Final Field Acceptance of the project as evidenced by the issuance of a “Statement of Completion” by the Inspector, except for certain specific items of Work, materials and equipment requiring a guaranty or warranty for a greater period of time as may be required elsewhere in the Contract Documents. In the event, however, that portions of the Work are sufficiently complete to allow use or occupancy by the CITY in the manner and for the purposes intended prior to final completion and acceptance of the project, the guarantee period will commence on the date shown on the “Statement of Partial Completion.”

B. The CONTRACTOR hereby agrees to indemnify and save harmless the CITY, and their officers, agents and employees against and from all claims and liability arising from damage and injury due to said defects. The CONTRACTOR shall repair or replace, at no cost to the CITY, any and all such defective Work and all other Work damaged thereby, which becomes defective during the term of the above-mentioned guaranties and warranties.

C. Within thirty (30) calendar days prior to completion of all Work, the CONTRACTOR shall submit to the CITY original copies of all manufacturers’ product guaranties and warranties covering all supplied and installed equipment and, where applicable, systems.

D. In addition to the requirements of INSURANCE, Contract Bonds, of the GENERAL CONDITIONS, it shall be understood that the Surety for the faithful performance bond, submitted in conformance with the terms of the Contract for this project, is liable on its bond for all obligations of the CONTRACTOR including guaranty provisions. The “Performance Bond” shall remain in effect until the end of the guarantee period.

E. The CONTRACTOR shall, within twenty-four (24) hours of notice from the ENGINEER of any Work not in accordance with the requirements of the Contract, or any defects in the Work, commence and prosecute with due diligence all work necessary to fulfill the terms of this Section and to complete the Work within a period of time as approved by the ENGINEER. The CONTRACTOR shall notify the ENGINEER of the repair schedule before commencing the repairs and notify the ENGINEER to arrange for inspection. The CONTRACTOR shall submit a written report of the defect and methods of correction. In the event of failure by the CONTRACTOR and/or its Surety to respond to the notice or to complete the Work required by this Section within the time specified, the CITY shall proceed to have such Work done at the CONTRACTOR's expense. The CONTRACTOR or its Surety shall promptly reimburse the CITY all direct and indirect cost associated with performing this Work.

F. Repairs, replacements or changes made under the requirements of this Section shall be warranted for the specified guarantee period, but no less than one year, beginning on the date of acceptance of the repairs, replacements or changes.

(END OF SECTION)

SECTION 01630
SUBSTITUTIONS AND "OR EQUAL" SUBMITTAL

1.1 THE REQUIREMENT

A. The CONTRACTOR may supply any of the materials specified or offer an equivalent. The ENGINEER shall determine whether the material offered is equivalent to that specified. The CONTRACTOR shall make all "Or Equal" submittals within thirty (30) calendar days after issuance of Notice to Proceed. Any request or submittal received after the specified period will be considered as NOT EQUAL to that so specified and will be processed as a substitution described hereinafter.

B. Whenever any particular material, process, or equipment is indicated by patent, proprietary or brand name, or by name of manufacturer, such wording is used for the purpose of facilitating its description and shall be deemed to be followed by the words 'or equal.' A listing of materials is not intended to be comprehensive, or in order of preference. The CONTRACTOR may offer any material, process, or equipment considered to be equivalent to that indicated. The substantiation of offers shall be submitted as provided in the Contract Documents.

C. The CONTRACTOR shall, at its expense, furnish data concerning items offered by it as equivalent to those specified. The CONTRACTOR shall have the material tested as required by the ENGINEER to determine that the quality, strength, physical, chemical, or other characteristics, including durability, finish, efficiency, dimensions, service, and suitability are such that the items will fulfill its intended function.

D. Test methods shall be subject to the approval of the ENGINEER. Test results shall be reported promptly to the ENGINEER, who will evaluate the results and determine if the substituted items are equivalent. The ENGINEER'S findings shall be final. Installation and use of substituted items shall not be made until approved by the ENGINEER.

E. All manufacturers' data submitted to the ENGINEER for review and acceptance shall clearly identify each proposed substitute with the corresponding Contract Drawing detail and Specification Section. If the ENGINEER decides to accept for use in the Project a material, process or article which is not the equal of that specified, substitution shall be made in the manner described in CHANGES AND EXTRA WORK of the GENERAL CONDITIONS, with a credit to the CITY for the difference in value.

F. The ENGINEER shall determine whether the material offered is equivalent to that specified. Any revision to structures, piping, mechanical, electrical, instrumentation, or any other work made necessary by such substitution must be approved by the ENGINEER, and the entire cost both direct and indirect of these revisions shall be borne by the CONTRACTOR.

G. Any materials, process, or article may be requested as a substitution by the CONTRACTOR, in lieu of that specified, under the following conditions:

1. Requests must be submitted in writing and in the manner described in SHOP DRAWINGS / SUBMITTALS of these GENERAL REQUIREMENTS.

2. Requests must be submitted thirty (30) calendar days prior to starting the work, as established by the ENGINEER, so as not to cause any delay in completion of the Project. No other request will be considered after expiration of the period specified, except that in exceptional cases where it is determined to be in the best interest of the CITY, as approved by the ENGINEER.

3. The CONTRACTOR agrees to pay for all Engineering and design services, if required, to make all changes and adjustments in material and work of all trades directly or indirectly affected by the substitute, to the satisfaction of the ENGINEER, at no cost to the CITY.

4. All requests for substitution shall be made through the CONTRACTOR. Submissions by the CONTRACTOR shall imply the CONTRACTOR'S approval of such substitution.

5. No requests for substitutions will be considered during the bidding period.

6. The CONTRACTOR shall furnish adequate data with each request for approval of a substitute to enable the ENGINEER to evaluate the proposed substitution.

7. If a substitute offered by the CONTRACTOR is not found to be equal to the specified material, then CONTRACTOR shall furnish and install the specified material.

8. The specified Contract completion time shall not be affected by any circumstance developing from the provisions of this Section.

(END OF SECTION)

SECTION 01711
SITE INVESTIGATION

1.1 THE REQUIREMENT

A. CONTRACTOR shall investigate the Jobsite prior to Bid and during construction to ascertain all conditions affecting necessary procedures and sequencing of the Work operations in the execution of the Contracted Work in accordance with the requirements shown herein and elsewhere.

1. Utilities in Abandoned Streets, Easements, and/or Alleys: CONTRACTOR is responsible for verifying and satisfying himself as to conditions under which work on such utilities will be done, such as what lines will be left in place, removed or rerouted. CONTRACTOR shall verify with Utility Map, Substructure Maps, District Maps & Street Lighting Map, etc., which are available at the Public Works Counter and in the Utility Companies. Should existing inactive utility lines (not shown or noted on the Drawings) be encountered, they shall be left-in-place and properly capped if not in way of new construction or if sufficiently below finish grade; as directed by the CITY ENGINEER. CONTRACTOR shall bear all costs involved in removing, rerouting or capping of such lines. CONTRACTOR shall contact the interested utility agencies as necessary to determine the Work operations involved.

2. CONTRACTOR shall report to the ENGINEER, prior to the Bid, any adverse condition(s), which would affect the proper execution of the Contracted Work and shall not proceed until instructed by the ENGINEER. Except as provided in GENERAL REQUIREMENTS Section 01253 – DIFFERING SITE CONDITION, failure to report any such conditions shall constitute acceptance of all site conditions, and any required removal, repair, or replacement caused by unsuitable conditions shall be performed by the CONTRACTOR at its sole cost and expense.

3. Start of Contracted Work at the Jobsite shall imply CONTRACTOR'S acceptance of job conditions.

B. Work Determination: CONTRACTOR shall satisfy itself regarding job/site conditions, the nature and types of work to be performed and shall be responsible for the determination of all classes of work to be accomplished at the Jobsite or at the manufacturer's plant.

C. Allotted Working Space: CONTRACTOR shall limit work operations to the "working site" or "Jobsite" or "Worksite," and areas immediately adjacent thereto, as shown on the Contract Drawings, specified or authorized by the CITY ENGINEER.

1.2 UTILITY LOCATION

A. General

1. The Permittee (in the case of Private Contracts) and the CITY (in the case of Cash or Assessment act contracts), will search known substructure records and furnish the CONTRACTOR with copies of documents which describe the location of utility substructures, or will indicate on the Plans for the Project those substructures (except for

service connections) which may affect the Work. Information regarding removal, relocation, abandonment, or installation of new utilities will be furnished to prospective Bidders.

2. Where underground main distribution conduits, such as water, gas, sewer, electric power, telephone or cable televisions are shown on the Plans, the CONTRACTOR shall assume that every property parcel will be served by a service connection for each type of utility.

3. As provided in Section 4216 of the California Government Code, at least two (2) working days prior to commencing any excavation, the CONTRACTOR shall contact the regional notification center (Underground Service Alert of Southern California) and obtain an inquiry identification number. Refer to PROTECTION OF PERSONS AND PROPERTY AND RESTORATION OF EXISTING IMPROVEMENTS of the GENERAL CONDITIONS.

4. The California Department of Transportation is not required by Section 4216 of the California Government Code to become a member of the regional notification center. The CONTRACTOR shall contact it for location of its subsurface installation.

5. The CONTRACTOR shall determine the location and depth of all utilities, including service connections, which have been marked by the respective owners and which may affect or be affected by its operations. If no pay item is provided in the Contract for this work, full compensation for such work shall be considered as included in the prices bid for other items of work.

B. Coordination

1. The CONTRACTOR is advised that the Drawings usually depict the location of substructures as they existed when the project was designed. Present-day information may indicate that new facilities may have been added, or are going to be added, or that some of those substructures are now, or will be, relocated, abandoned, removed, lowered, raised, blanketed, encased, enlarged, protected, or altered in some other way. The CONTRACTOR shall carefully examine the proposed construction site prior to Bid and during construction for any evidence of recent surfacing of excavations, or the possible conflict with surface or aerial installations, and the latest substructure maps, and bid accordingly. If further information or clarification is desired, CONTRACTOR is urged to immediately contact the following:

   a. The appropriate utility companies;

   b. The appropriate District Office of the Bureau of Engineering; and/or

   c. City of Los Angeles, Utility Coordination Section of the Project Award and Control Division
   1149 S. Broadway, Suite 140,
   Los Angeles, CA 90015
   (213) 847-0624.

2. Review and verify with the information indicated on the Contract Drawings and the information provided in the GENERAL REQUIREMENTS Section 01112 - DESCRIPTION OF WORK.

1.3 Utility Protection

A. The CONTRACTOR shall not interrupt the service function or disturb the support of any utility without authority from the owner or order from the CITY. All valves, switches, vaults, and meters shall be maintained readily accessible for emergency shutoff.

B. Where protection is required to ensure support of utilities located as shown on the Plans or in accordance with Subsection 1.2 – Utility Location, above, the CONTRACTOR shall, unless otherwise provided, furnish and place the necessary protection at its expense.

C. Upon learning of the existence and location of any utility omitted from or shown incorrectly on the Plans, the CONTRACTOR shall immediately notify the ENGINEER in writing. When authorized by the ENGINEER, support or protection of the utility will be paid for as provided in SECTION 01254 – CHANGE ORDERS of the GENERAL REQUIREMENTS.

D. The CONTRACTOR shall immediately notify the ENGINEER and the utility owner if any utility is disturbed or damaged. The CONTRACTOR shall bear the costs of repair or replacement of any utility damaged if located as noted above, in Subsection 1.2 – Utility Location.

E. When placing concrete around or contiguous to any non-metallic utility installation, the CONTRACTOR shall, at its expense:

1. Furnish and install a 50mm (2 inch) cushion of expansion joint material or other similar resilient material; or

2. Provide a sleeve or other opening which will result in a 50mm (2 inch) minimum-clear annular space between the concrete and the utility; or

3. Provide other acceptable means to prevent embedment in or bonding to the concrete.

1.4 Utility Removal

A. Unless otherwise specified, the CONTRACTOR shall remove all interfering portions of utilities shown on the Plans or indicated in the Bid documents as “abandoned” or “to be abandoned in place”. Before starting removal operations, the CONTRACTOR shall ascertain from the CITY whether the abandonment is complete, and the costs involved in the removal and disposal shall be included in the Bid for the items of work necessitating such removals.

1.5 Utility Relocation

A. When feasible, the owners responsible for utilities within the area affected by the Work will complete their necessary installations, relocations, repairs, or replacements before commencement of work by the CONTRACTOR. When the Plans or Specifications indicate that a utility installation is to be relocated, altered, or constructed by others, the CITY will conduct all negotiations with the owners

and work will be done at no cost to the CONTRACTOR, except as provided in SSPWC Section 301-1.6. Utilities which are relocated in order to avoid interference shall be protected in their position and the cost of such protection shall be included in the Bid for the items of Work necessitating such relocation.

B. After award of the Contract, portions of utilities which are found to interfere with the Work will be relocated, altered or reconstructed by the owners, or the ENGINEER may order changes to the Work to avoid interference. Such changes will be paid for in accordance with SECTION 01254 – CHANGE ORDERS of the GENERAL REQUIREMENTS. However, for interfering City owned utilities identified on the Plans including but not limited to sewers, storm-drains, traffic signal or streetlight conduits and appurtenances, their restoration, alteration, or reconstruction shall be performed by the CONTRACTOR and the associated cost shall be included in the CONTRACTOR's bid.

C. When the Plans or Specifications provide for the CONTRACTOR to alter, relocate, or reconstruct a utility, all costs for such work shall be included in the Bid for the items of work necessitating such work. Temporary or permanent relocation or alteration of utilities requested by the CONTRACTOR for its convenience shall be its responsibility and it shall make all arrangements and bear all costs.

D. The utility owner will relocate service connections as necessary within the limits of the Work or within temporary construction or slope easements. When directed by the ENGINEER, the CONTRACTOR shall arrange for the relocation of service connections as necessary between the meter and property line, or between a meter and the limits of temporary construction or slope easements. The relocation of such service connections will be paid for in accordance with the provisions of SECTION 01254 – CHANGE ORDERS of the GENERAL REQUIREMENTS. Payment will include the restoration of all existing improvements which may be affected thereby. The CONTRACTOR may agree with the owner of any utility to disconnect and reconnect interfering service connections. The CITY will not be involved in any such agreement.

1.6 Utility Delays

A. The CONTRACTOR shall notify the ENGINER of its construction schedule insofar as it affects the protection, removal, or relocation of utilities. Said notification shall be included as part of the construction schedule required in SECTION 01321 - CONTRACTOR'S CONSTRUCTION SCHEDULE AND REPORTS OF THE GENERAL REQUIREMENTS. The CONTRACTOR shall notify ENGINEER in writing of any subsequent changes in the construction schedule which will affect the time available for protection, removal, or relocation of utilities.

B. The CONTRACTOR will not be entitled to damages or additional payment for delays attributable to the utility relocations or alterations if correctly located, noted, and completed in accordance with 1.2 Utility Location, above.

C. The CONTRACTOR may be given an extension of time for unforeseen delays attributable to the unreasonably protracted interference by utilities in performing Work correctly shown on the Plans

D. The CITY will assume responsibility for the timely removal, relocation, or protection of existing main or trunkline utility facilities within the area affected by

the Work if such utilities are not identified in the Contract Documents. The CONTRACTOR will not be assessed liquidated damages for any delay caused by failure of CITY to provide for the timely removal, relocation, or protection of such existing facilities.

E. If the CONTRACTOR sustains loss due to delays attributable to interferences, relocations, or alterations not covered by Subsection 1.2 - Utility Location, above, which could not have been avoided by the judicious handling of forces, equipment, or plant, there shall be paid to the CONTRACTOR such amounts as the ENGINEER may find to be fair and reasonable compensation for such part of the CONTRACTOR'S actual loss as was unavoidable and the CONTRACTOR may be granted an extension of time.

F. Payment to the CONTRACTOR for actual loss due to a protracted utility delay shall be calculated based on wage increases, price increases of material and equipment, additional insurance costs and actual direct costs of maintaining the Worksite incurred because of the utility delay.

1.7 Utility Cooperation.

A. When necessary, the CONTRACTOR shall so conduct its operations as to permit access to the Worksite and provide time for utility work to be accomplished during the progress of the Work.

(END OF SECTION)

SECTION 01712
SUBSURFACE DATA

1.1 THE REQUIREMENT

A. All soil and test hole data, water table elevation, and soil analyses shown on the Drawings or included in the Specifications / Project Manual apply only at the location of the test holes and to the depth indicated. Test reports for test holes, which have been drilled, are available for inspection at the office of the ENGINEER, or contained in the Geotechnical Report for the project. Any additional subsurface exploration shall be done by the CONTRACTOR at their own expense. The indicated elevation of the water table is that level at the date the test hole data was obtained. It is the CONTRACTOR'S responsibility to determine and allow for the elevation of groundwater at the date of Project construction. A difference in elevation between the ground water shown in soil boring logs and groundwater actually encountered during construction will not be considered as a basis for extra work.

(END OF SECTION)

SECTION 01721
MOBILIZATION

1.1 THE REQUIREMENT

Mobilization shall consist of preparatory work and operations including, but not limited to, those necessary for the movement of personnel, equipment, supplies and incidentals to the Project site for all other work and operations that must be performed or costs incurred before beginning work on the various Contract items on the Project site.

1.2 SIGNS

The names, addresses and specialties of CONTRACTORS, subcontractors, engineers or architects may be displayed on removable signs. The size and location shall be subject to the ENGINEER'S approval. Commercial advertising matter shall not be attached to or painted on the surfaces of buildings, fences, canopies or barricades. Refer to GR Section 01581 – Project Signs, for additional requirements.

(END OF SECTION)

(SEE ATTACHMENT)

ATTACHMENTS TO SECTION 01721

Attachments to General Requirements Section 01721 consists of one (1) document, as follows:

ATTACHMENT NUMBER	TITLE OF ATTACHMENT	NUMBER OF PAGES IN THIS ATTACHMENT
01721-A1	Construction Water Supply Schematic	1

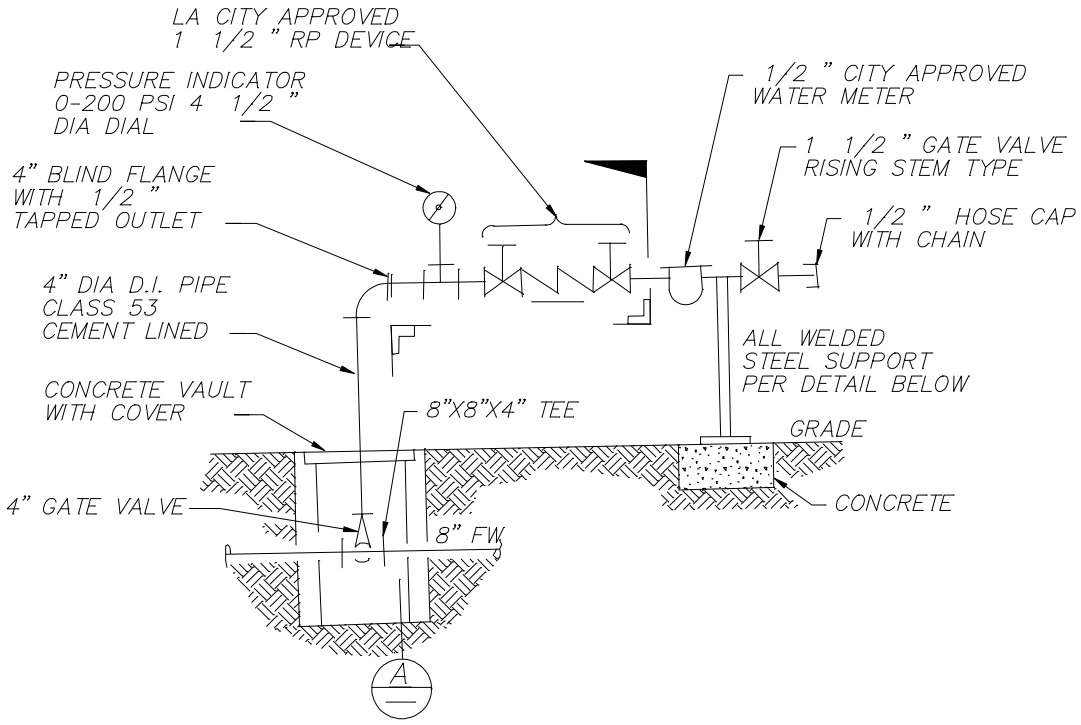

CONSTRUCTION WATER SUPPLY DETAIL

NTS

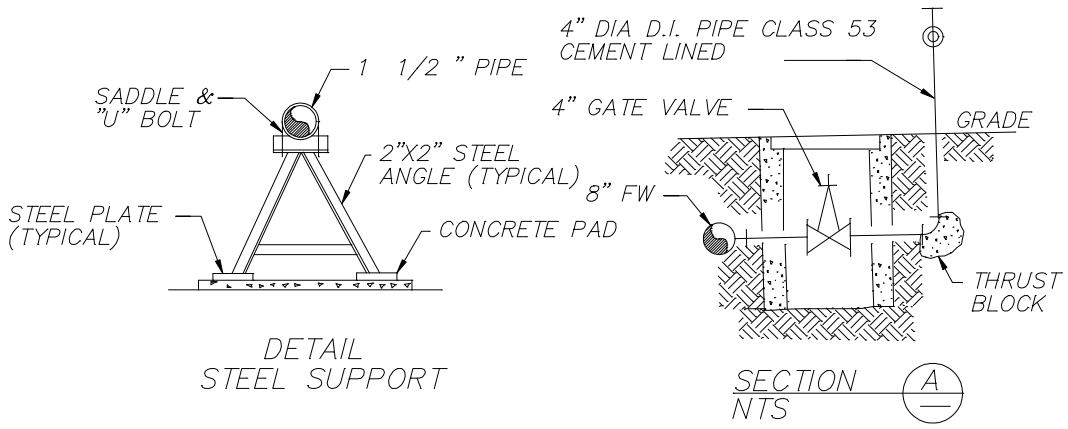

CONSTRUCTION WATER SUPPLY SCHEMATICS

NTS

SECTION 01722
SURVEYING

1.1 THE REQUIREMENT

A. Permanent Survey Control Network Markers

1. The CITY Surveyor will establish horizontal and vertical control by recovering or reestablishing city centerline control monuments and identifying city benchmarks. The CONTRACTOR shall be responsible to protect all preconstruction control network reference points. In the case, where the monuments are to be removed or damaged by the CONTRACTOR, the CONTRACTOR shall notify the ENGINEER / CITY Surveyor in writing seven (7) calendar days before starting the Work. There will be a charge to the CONTRACTOR for replacing monuments and benchmarks that are disturbed by the CONTRACTOR prior to the CITY Surveyor establishing adequate reference points.

B. Staking Requests

1. The CONTRACTOR shall complete a survey request form seven (7) full working days in advance by contacting the appropriate office in the following list. Additional lead time will facilitate services.

2. The form shall state exactly what and when the services are needed. Services such as painting removals, type of stakes, location, limits, offset directions and distance from stakes shall be indicated. The CONTRACTOR shall indicate the Project title, job work order number, Project address and telephone number(s) of the CONTRACTOR'S contact person. A copy of the request can be emailed to the Bureau of Engineering Survey Division at the following address: Eng.surdivisionwr@lacity.org and a copy shall be sent to the ENGINEER.

Valley District Survey Office (818) 374-4660
6262 Van Nuys Blvd. Suite 350
Van Nuys, CA 91401
Email Address: Eng.surdivisionwr@lacity.org

Central District Survey Office (213) 473-0608
555 Ramirez St, Space 250
Los Ángeles, CA 90012
Email Address: Eng.surdivisionwr@lacity.org

3. The CONTRACTOR is responsible for protecting all survey stakes requested. There will be a fee for re-staking survey stakes lost due to neglect by the CONTRACTOR.

4. If applicable, the CONTRACTOR may pick up grade sheets at a location mutually agreed upon by the CONTRACTOR, ENGINEER and the CITY Surveyor.

5. If more than one survey is requested, the CONTRACTOR shall initiate all survey requests by priority number. Subcontractor's staking requests shall go through the CONTRACTOR.

6. The CITY Surveyor performing construction layout shall receive copies of all Change Orders, preliminary and final, plan clarifications, requests for information and shop Drawings affecting survey from the ENGINEER.

7. When survey services are required on CITY holidays or weekends, a written request must be sent to the CITY'S Principal Surveyor seven (7) full working days before such services are required, with one duplicate copy of the request given to the ENGINEER for approval.

Mr. Bill Knight, Principal Surveyor
Bureau of Engineering, Survey Division
201 N. Figueroa Street, Suite 1100
Los Angeles, CA 90012
William.knight@lacity.org

8. The CONTRACTOR shall perform and be responsible for the accurate layout of all portions of the Contracted Work, and shall verify all dimensions on the Contract Drawings and shall report to the ENGINEER, any discrepancies before proceeding with related Work.

9. All Work shall conform to the lines, elevations and grades shown on the Drawings.

10. Unless otherwise specified, stakes will be set and stationed by the CITY for curbs, headers, sewers, storm drains, structures and rough grade and a corresponding cut or fill to finished grades indicated on the grade sheets. Grades for underground conduits will be set at the surface of the ground. The CONTRACTOR shall transfer them to the bottom of the trench. The CONTRACTOR shall report any grade variation to the ENGINEER. The CONTRACTOR is not relieved of any responsibility for any error in the grade of the finished work.

C. Construction Survey Services

1. The ENGINEER / CITY Surveyor shall establish horizontal and vertical control points for construction. The CONTRACTOR shall notify the ENGINEER / CITY Surveyor in writing at least seven (7) full working days before survey services are required in connection with the laying out of any portion of the work. The CONTRACTOR shall dig all holes necessary for line and grade stakes when requested by the ENGINEER.

2. The CONTRACTOR shall be responsible for their own layout based on the ENGINEER'S / CITY Surveyor survey stakes and grade sheets. The CONTRACTOR shall allow sufficient time for checking and issuance of grade sheets by the ENGINEER.

3. The ENGINEER / CITY Surveyor will be responsible for the accuracy of surveying adequate for construction. The CONTRACTOR shall preserve construction survey stakes and marks for the duration of their usefulness. If any construction survey stakes are lost or disturbed and need replacement, such replacement shall be by the ENGINEER / CITY Surveyor at the expense of the CONTRACTOR.

4. Unless otherwise specified, stakes will be set and stationed by the ENGINEER / CITY Surveyor for curbs, headers, sewers, storm drains, structures, and rough grade. A corresponding cut or fill to finished grade (or flowline) will be indicated on the grade sheet.

D. Line and Grade

1. The ENGINEER / CITY Surveyor shall set alignment and grade stakes only for all outdoor pipelines that are eight inches (8”) in diameter or larger. The CONTRACTOR shall furnish all other lines and grades required for proper execution of the work.

2. After exterior walls have been located, the CONTRACTOR shall be responsible for the location of all interior construction including interior piping.

3. All work shall conform to the lines, elevations, and grades shown on the Plans.

4. Three consecutive points set on the same slope shall be used together so that any variation from a straight grade can be detected. Any such variation shall be reported to the ENGINEER in writing. In the absence of such written notification, the CONTRACTOR shall be responsible for any error in the grade of the finished work.

5. Grades for underground conduits will be set at the surface of the ground. The CONTRACTOR shall be responsible for transferring the grades to the bottom of the trench.

(END OF SECTION)

SECTION 01723
RIGHT OF WAY

1.1 THE REQUIREMENT

A. The CONTRACTOR shall not allow its employees to use private property for any reason, or to use water or electricity from such property without written permission from the owner. The CONTRACTOR shall provide evidence of such permission, in writing, to the ENGINEER, before entering upon such lands.

SECTION 01732
ADDITIONAL POTHOLING

1.1 THE REQUIREMENT

A. The CONTRACTOR shall conduct exploratory excavations by potholing to verify or to discover the actual locations and the size of existing underground utilities and improvements. The CONTRACTOR shall take care not to damage existing facilities during potholing operations. Any utility or existing facility (including those located by Underground Service Alert - USA) within 3 feet of any trench or excavation shall be potholed prior to starting the contract work in the vicinity. Potholing shall be done in each given area where excavation work is to occur at least fourteen (14) calendar days in advance of any excavation or construction in that area, to avoid possible delay in the progress of the Work.

B. Potholing shall consist of excavations at the locations of utilities or other underground facilities indicated on the Drawings, located by USA, or as directed by the ENGINEER. All costs of potholing operations for the utilities indicated on the Drawings shall be included in the CONTRACTOR'S Bid.

C. If an allowance for Additional Potholing has been established and included in the SCHEDULE OF WORK AND PRICES, this allowance shall only be used to reimburse the CONTRACTOR for potholing utilities not shown or otherwise referenced on the drawings, or as directed by the ENGINEER. If the total cost of the Work directed under the Additional Potholing allowance differ from the amount set forth in the SCHEDULE OF WORK AND PRICES, the Contract Price shall be adjusted by a Change Order. The adjustment shall be the difference between the total actual costs and the amount included in the Bid, as an additional amount due to the CONTRACTOR or a credit to the CITY, as appropriate.

D. In addition to the potholes indicated on the Drawings, or directed by the ENGINEER, the CONTRACTOR may opt to do further potholing deemed necessary at no additional cost to the CITY.

E. Potholing operations shall conform to all applicable requirements of INJURY AND ILLNESS PREVENTION - SAFETY MEASURES of the GENERAL CONDITIONS, as to sidewall slopes, sheeting and shoring, and all other excavation and trenching provisions specified herein.

F. Potholing operations shall be conducted in accordance with the requirements of PROTECTION OF PERSONS AND PROPERTY AND RESTORATION OF EXISTING IMPROVEMENTS of the GENERAL CONDITIONS, in order to ensure that the existing facilities will remain in operation with minimum interruptions. Attention is specifically directed to the limitations on street closures, altering of vehicular and pedestrian access in accordance with INTERFACE / COORDINATION REQUIREMENTS of these GENERAL REQUIREMENTS. Potholes shall be identified and protected in accordance with the City of LA Brown Book, the California Manual on Uniform Traffic Control Devices (MUTCD) and Work Area Traffic Control Handbook (WATCH) Standards.

G. The CONTRACTOR'S proposed method of potholing and schedule for potholing shall be submitted to the ENGINEER for approval, at least thirty (30) days prior to the commencement of operation. Any utilities damaged during potholing shall be immediately reported to the ENGINEER and INSPECTOR and repairs made

immediately in accordance with the requirements of PROTECTION OF PERSONS AND PROPERTY AND RESTORATION OF EXISTING IMPROVEMENTS of the GENERAL CONDITIONS.

H. A complete log of all potholes shall be kept by the CONTRACTOR, showing specific locations and dimensions of trenches. The log shall be verified by the INSPECTOR prior to the backfilling of the potholes. The verified log will be submitted to the ENGINEER and the INSPECTOR within two (2) working days after completion of potholing in each area. Payment for potholing utilities not shown or otherwise referenced on the drawings, or as directed by the ENGINEER will not be made unless these potholes are listed on the verified log.

I. The CONTRACTOR shall record the coordinates, elevations and dimensions of all utilities and improvements verified or discovered by potholing. The records shall be submitted to the ENGINEER within two (2) working days after the completion of potholing in each area. The records shall also include dates of the potholing operations and any additional discovered information or pertinent data.

J. Upon completion of potholing in each area, and after verification of the logs by the INSPECTOR, potholes shall be immediately backfilled and compacted in accordance with the specifications, or restored as directed by the ENGINEER.

(END OF SECTION)

SECTION 01740
REMOVAL, CLEANUP, AND DEMOBILIZATION

1.1 THE REQUIREMENT

A. Throughout all phases of construction, including suspension of work, and until the Final Acceptance, the CONTRACTOR shall keep the site clean and free from rubbish and debris. The CONTRACTOR shall also abate dust nuisance by cleaning, sweeping and sprinkling with water, or other means as necessary. The use of water resulting in mud on public streets will not be permitted as a substitute for sweeping or other methods.

B. The road(s) on the construction site shall be paved immediately after the installation of planned utilities and the constructions and underground/final inspection of SS, SD, curbs, and gutters. The exit road on the construction site shall be paved first.

C. Vehicles exiting the construction site shall have all dirt clods and mud removed from their tires.

D. When required by the Plans or Specifications, the CONTRACTOR shall furnish and operate a self-loading motor sweeper with spray nozzles at least once each working day for the purpose of keeping paved areas acceptably clean whenever construction, including restoration, is incomplete.

E. Materials and equipment shall be removed from the site as soon as they are no longer necessary. Before the final inspection, the site shall be cleared of equipment, unused materials and rubbish so as to present a satisfactory clean and neat appearance. All cleanup costs shall be included in the CONTRACTOR'S Bid.

F. Care shall be taken to prevent spillage on haul routes. Any such spillage shall be removed immediately and the area cleaned.

G. Excess excavated material from catch basins or similar structures shall be removed from the site immediately. Sufficient material may remain for use as backfill if permitted by the Specifications. Forms and form lumber shall be removed from the site as soon as practicable after stripping.

H. Failure of the CONTRACTOR to comply with the ENGINEER'S cleanup orders may result in an order to suspend work until the condition is corrected. No additional compensation will be allowed as a result of such suspension.

(END OF SECTION)

SECTION 01770
PROJECT CLOSEOUT

1.1 THE REQUIREMENT

A. Closeout Timetable

The CONTRACTOR shall establish dates for equipment testing and acceptance periods (as required under the Contract). Such dates shall be established not less than seven (7) calendar days prior to beginning any of the foregoing items, to allow the CITY, the ENGINEER, and their authorized representatives sufficient time to schedule attendance at such activities.

B. Final Submittals

The CONTRACTOR, prior to requesting Final Payment, shall obtain and submit the following items to the ENGINEER.

1. Written guarantees, where required.

2. Technical manuals and instructions.

3. Keying schedule.

4. Maintenance stock items; spare parts; special tools.

5. Completed record drawings.

6. Certificates of inspection and acceptance by local governing agencies having jurisdiction.

7. Los Angeles department of Building and Safety (LADBS) Plan Check Set and LADBS Building Card following LADBS final inspection approval, as applicable.

8. Releases from all parties who are entitled to claims against the subject Project, property, or improvement pursuant to the provisions of law.

C. Final Cleanup

1. The CONTRACTOR shall perform all tasks specified in REMOVAL, CLEANUP, AND DEMOBILIZATION of the GENERAL REQUIREMENTS.

D. Maintenance And Guarantee

1. The CONTRACTOR shall make all repairs and replacements promptly upon receipt of written order from the ENGINEER. If the CONTRACTOR fails to make such repairs or replacements promptly, the ENGINEER reserves the right to do the work and the CONTRACTOR and his surety shall be liable to the CITY for the cost thereof.

2. Replacement of earth fill or backfill, where it has settled below the required finish elevations, shall be considered as a part of such required

repair work, and any repair or resurfacing constructed by the CONTRACTOR which becomes necessary by reason of such settlement shall likewise be considered as a part of such required repair work.

E. BOND

1. The CONTRACTOR shall provide a bond to guarantee performance of the provisions contained in NON-CONFORMING WORK and INSURANCE (Paragraph K) of the GENERAL CONDITIONS, GUARANTY / WARRANTY of these GENERAL REQUIREMENTS, and Paragraph 1.1 D of this Section.

(END OF SECTION)

SECTION 01783
PROJECT RECORD DOCUMENTS

1.1 THE REQUIREMENT

A. Project Record Documents comprised of Record Drawings (As-Built, full size Project Plans) that are developed during construction to delineate the actual in-place constructed conditions shall be provided by the CONTRACTOR to the ENGINEER. Requirements for Record Drawings as specified elsewhere, shall supplement the requirements specified herein.

B. Record Drawings shall include all changes in the As-Bid Plans including those issued as Change Orders, Plan Clarifications, Addenda, Notice to Bidders, responses to Requests for Information, Jobsite Memos, and any additional details needed for the construction of the Project, but not shown on the As-Bid Plans. Any substructures encountered while excavating that are left in place shall be located by survey to the satisfaction of the ENGINEER shown, identified and recorded on the Record Drawings. All substructures including, but not limited to, concrete structures, electrical conduit and duct banks, drains and sanitary sewer pipelines, process piping, water lines, and similar substructures, whose installed location differs from that shown on the As-Bid Plans, shall be precisely located by survey to the satisfaction of the ENGINEER shown, identified and recorded on the Record Drawings before backfilling.

C. The CONTRACTOR shall prepare Record Drawings. The Record Drawings shall be kept by the CONTRACTOR, and updated during construction.

D. Where the Plans are diagrammatic or lacking precise details, the CONTRACTOR shall produce dimensioned full-size sheets as the Record Drawings. Installations outside of structures shall be located by coordinates and elevations. Where substructures are encased in concrete, the outside dimensions of the encasement shall also be given.

E. In the case of those Drawings which depict the detail requirements for equipment to be assembled and wired in the factory, the Record Drawings shall be updated by indicating those portions which are superseded by final Shop Drawings and by including appropriate reference information describing the Shop Drawings by manufacturer, drawing and revision numbers.

F. Record Documents, particularly the Record Drawings, shall include a copy of all changes including those issued as Change Orders, Plan Clarifications, Addenda, Notice to Bidders, responses to Requests for Information (RFI's), Jobsite Memos, and any additional details needed for the construction of the Project, but not shown on the Contract Drawings or included in the Project Manual. When possible, attach these copies to the back of the corresponding full-size plan sheet or attached stacked to front of sheet.

G. Record Drawings shall be produced and submitted in two (2) different formats as listed below for review and approval by the ENGINEER:

1. Marked Record Drawings: These Record Drawings shall be As-Bid Plans marked with red ink on one (1) set of full-size prints. Record Drawings in red marking format shall be available for the ENGINEER'S review at all times during construction.

2. Computer Aided Drafting (CAD) Record Drawings: These Record Drawings shall be produced in electronic CAD format based on AutoCAD software and version used to prepare the As-Bid Plans. The ENGINEER will provide As-Bid Plans in CAD format for the CONTRACTOR to develop the project Record Drawings. Additional drawings that may be required to indicate record conditions shall be prepared in similar CAD format as well. All additions to As-Bid Plans shall employ drafting standards which are consistent with those used in the As-Bid Plans and per the City of Los Angeles CAD Standards found at the following link: http://eng2.lacity.org/techdocs/CADSTDS/cad_details.htm. Production of Record Drawings in CAD format shall start no later than at 75% of work completion.

    a) CAD Record Drawings shall be fully revised versions of the As-Bid Plans. Simply marked and clouded CAD Drawings are not acceptable.

    b) Each revised item shall be noted with an upside down numbered triangle, and the triangle's source shall be described in the sheet border.

    c) For bidding purposes the CONTRACTOR shall assume 10 additional new highly detailed sheets will need to be created to accommodate changes.

    d) CONTRACTOR's CAD technician preparing the CAD Record Drawings shall have minimum ten (10) years of experience and proficient in preparing Micro Station and AutoCAD drawings.

    e) The CONTRACTOR shall submit the CAD Record Drawings on a DVD or Flash Drive.

3. The CONTRACTOR and their CAD technician(s) shall arrange meetings with each of the City's project designers for all disciplines involved, to discuss and plan for the first CAD Record Drawing submittal. Meeting shall be scheduled 45 days prior to when the submittal is first due.

4. The ENGINEER will review and approve the Marked and CAD Record Drawings prior to submittal of all Monthly Payment Requests. If, in the opinion of the ENGINEER, the Record Drawings are not current, approval of the Monthly Payment may be withheld until the Record Drawings are made current. In addition, the CONTRACTOR shall submit a signed certification with each Monthly Payment Request stating that Record Drawings are complete and accurate as of the date of the payment request.

5. At the Completion of the Work and after Final Inspection, the CONTRACTOR shall submit to the ENGINEER, the final CAD Record Drawings and the Marked Record Drawings for review and approval. Any retained funds shall only be released upon the ENGINEER approval of the final CAD and Marked Record Drawings. The CONTRACTOR shall certify to the completeness and accuracy of the Record Drawings.

(END OF SECTION)